TriOS

xylem

LISA UV

Manual

Table of contents

1 General information **4**
1.1 Introduction 4
1.2 Health and safety instructions 4
1.3 Warning notices 5
1.4 User and operating requirements 6
1.5 Intended use 6
1.6 Disposal instructions 7
1.7 Certificates and approvals 7

2 Introduction **8**
2.1 Product identification 8
2.2 Scope of delivery 9
2.3 Measurement principle and structure 9
2.3.1 Spectral absorption coefficient SAC 10
2.3.2 Parameters 11
2.3.3 Calculation UVT_{254n} standardized to 10 mm 11
2.4 Browser 11
2.5 Login 17

3 Commissioning **18**
3.1 Electrical installation 18
3.1.1 SubConn connector 8pin 18
3.1.2 Fixed cable with M12 industrial plug 19
3.2 Interfaces 19
3.2.1 Serial interface 19
3.2.2 Analog interface 21
3.2.3 Network 23

4 Application **26**
4.1 Normal operation 26
4.1.1 Diving operation 26
4.1.2 Cleaning system 27
4.1.3 Float 28
4.2 Bypass installation 28
4.3 Pipe installation 30
4.4 Use with cuvette 32

5 Calibration **33**
5.1 Manufacturer calibration 33
5.2 Customer calibration 34
5.3 Measurement properties 37

6 Malfunction and maintenance **38**
6.1 Cleaning and care 38
6.1.1 Housing cleaning 38

6.1.2 Cleaning the measuring window 39
6.2 Maintenance and inspection 40
6.2.1 Checking the zero point 40
6.2.2 Checking the maximum value 42
6.3 Troubleshooting 43
6.3.1 Determining a new zero point 43
6.3.2 Restore point 45
6.3.3 Measurement with a cuvette 46
6.3.4 Firmware update 47
6.4 Return shipment 48

7 Technical data 50
7.1 Technical specifications 50
7.2 Measurement ranges and detection limits 52
7.3 Outer dimensions 53

8 Accessories 55
8.1 Measuring accessories 55
8.1.1 VALtub 55
8.1.2 Cuvette holder 55
8.2 Controller 55
8.2.1 TriBox3 55
8.2.2 TriBox mini 56

9 Warranty 57

10 Technical support 58

11 Contact us 59

12 Keyword index 60

13 Appendix 62
13.1 FAQ - Frequently asked questions 62
13.2 CE declaration of conformity 64
13.3 Modbus RTU 65

1 General information

1.1 Introduction

Welcome to TriOS. We are delighted that you have chosen our LISA UV immersion sensor.

LISA UV uses two different LEDs for long-term stable measurement of SAC or color at different wavelengths. The first channel is the nominal wavelength. The second channel is used for turbidity or background correction. Equipped with our innovative G2 interface with web browser configuration, internal data logger, flexible protocols and data outputs, LISA UV has versatile features.

LISA UV is equipped with the TriOS G2 interface, allowing quick and easy sensor configuration via a web browser. Integration into existing process control systems and external data loggers is easy to implement. Using WLAN, a laptop, tablet or smartphone can then simply be used for control without the need to install special application software or an app.

In this manual you will find all the information about LISA UV that you need for commissioning. Technical specifications as well as detection limits and dimensions can be found in chapter 7.

Please note that the user is responsible for complying with regional and national regulations for the installation of electronic devices. Any damage caused by incorrect use or unprofessional installation is not covered by the warranty.

All sensors and accessories supplied by TriOS Mess- und Datentechnik GmbH must be installed and operated in accordance with TriOS Mess- und Datentechnik GmbH specifications. All parts have been designed and tested according to international standards for electronic instruments. The device complies with international standards for electromagnetic compatibility. Please use only original TriOS accessories and cables to ensure smooth and professional use of the devices.

Read this manual carefully before using the device and keep it for future reference. Before using the sensor, make sure that you have read and understood the safety precautions described below. Always ensure that the sensor is operated correctly. The safety precautions described on the following pages are intended to ensure problem-free and correct operation of the device and the associated accessories and to prevent you, other persons or devices from being harmed.

NOTICE

If translations differ from the original German text, the German version is binding.

Firmware updates

This manual refers to firmware version 1.8.3. and higher. Updates include troubleshooting and new functions and options. Devices with older firmware versions may not have all the functions described here.

Copyright notice

All contents of this manual, in particular texts, photographs and graphics, are protected by copyright. Unless expressly indicated otherwise, the copyright lies with TriOS Mess- und Datentechnik GmbH. Persons who violate the copyright are liable to prosecution in accordance with § 106 ff of the Copyright Act and will also be warned and liable to pay compensation.

1.2 Health and safety instructions

This manual contains important information on health and safety regulations. This information is marked in accordance with the international specifications of ANSI Z535.6 (“Product safety information in product manuals, instructions and other collateral materials”) and must be followed. The following categories are distinguished:

⚠ DANGER

Danger / Will cause serious injury or death

⚠ WARNING

Warnings / May cause serious injury or death

⚠ CAUTION

Caution / May cause moderate injury

NOTICE

May lead to material damage

Tip / Useful information

Electromagnetic waves

Devices that emit strong electromagnetic waves can influence the measurement data or cause the sensor to malfunction. Avoid operating the following devices in the same room as the TriOS sensor: cell phones, cordless phones, transceivers or other electrical devices that generate electromagnetic waves.

⚠ CAUTION

Never look directly into the light source without suitable UV protection! The UV light can irreversibly damage your eyes.

Reagents

Follow the manufacturer's safety and operating instructions when using reagents. Observe the applicable Ordinance on Hazardous Substances for Reagents (GefStoffV)!

Biological safety

Liquid waste may be biologically hazardous. You should therefore always wear gloves when handling such materials. Observe the currently valid Biological Substances Ordinance (BioStoffV)!

Waste

When handling liquid waste, the regulations for water pollution, drainage and waste disposal must be observed.

1.3 Warning notices

This sensor has been developed for use in industry and science. It should only be used to measure aqueous solutions such as drinking water, process waste water, river water or seawater.

NOTICE

Sensors made of stainless steel are not made for use in seawater or high chloride concentrations (corrosion). Only sensors made of titanium can be used here.

- Sensors made of stainless steel must be cleaned immediately after contact with salt water or other corrosion-causing substances (e.g. acids, alkalis, chlorine-based compounds). The material resistance should be tested for each application.
- The sensor has seals made of NBR (acrylonitrile butadiene rubber). Sealing rings made of other materials may be used on individual request. Before operation, make sure that the measuring medium does not damage the seals.
- Do not cut, damage or modify the cable. Ensure that there are no heavy objects on the cable and that the cable does not kink. Make sure that the cable does not run close to hot surfaces.
- If the sensor cable is damaged, it must be replaced with an original part by TriOS Mess- und Datentechnik GmbH technical support.
- Do not place any unsuitable objects within the optical path while the measurement process is running, as this may cause damage to the sensor or falsified measurement results.
- Stop operation of the sensor if excessive heat is generated (i.e. more than lukewarm). Switch off the sensor immediately and disconnect the cable from the power supply. Please contact your dealer or TriOS technical support.
- Never attempt to disassemble or modify any part of the sensor unless specifically described in this manual. Inspections, modifications and repairs may only be carried out by the device dealer or by TriOS authorized and qualified specialists.
- TriOS Mess- und Datentechnik GmbH devices comply with the highest safety standards. Repairs to the devices (which include the replacement of the connecting cable) must be carried out by TriOS Mess- und Datentechnik GmbH or an authorized TriOS workshop. Incorrect, improper repairs can lead to accidents and injuries.

NOTICE

TriOS does not guarantee the plausibility of the measured values. The user is always responsible for monitoring and interpreting the measured values.

1.4 User and operating requirements

The LISA UV photometer was developed for use in industry and science. The target group for operating the SAC probe LISA UV is technically experienced specialist personnel in companies, sewage treatment plants, waterworks and institutes.

The application often requires the handling of hazardous substances. We assume that the operating personnel are familiar with the handling of hazardous substances due to their professional training and experience. In particular, the operating personnel must be able to correctly understand and implement the safety markings and safety instructions on the packaging and in the package inserts of the test kits.

1.5 Intended use

The intended use of the LISA UV photometer is exclusively to carry out photometric measurements as described in this manual. In this respect, the photometer is an immersion sensor that is used under water or with flow-through cells. Please observe the technical data of the accessories. Any other use is considered improper.

The sensor may only be used for measuring the SAC and transmission of aqueous liquids, such as process waste water, municipal waste water, surface water and groundwater. The use of other media can damage

the sensor. For the use of the LISA UV in media other than those specified here, please contact the technical support of TriOS Mess- und Datentechnik GmbH (support@trios.de).

NOTICE

Avoid any contact with the glass parts in the optical path, as these can become scratched or dirty. As a result, the functionality of the device is no longer guaranteed.

According to current scientific knowledge, the device is safe to use if it is handled in accordance with the instructions in this operating manual.

NOTICE

Damage caused by improper use is excluded from the warranty.

1.6 Disposal instructions

At the end of its service life or useful life, the device and its accessories can be returned to the manufacturer (see address below) for disposal in an environmentally friendly manner. Proof of prior professional decontamination must be provided in the form of a certificate. Please contact us before returning the device for further details.

Address of the manufacturer:

TriOS Mess- und Datentechnik GmbH
Bürgermeister-Brötje-Str. 25
26180 Rastede
Rastede, Germany
Phone: +49 (0) 4402 69670 - 0
Fax: +49 (0) 4402 69670 - 20

1.7 Certificates and approvals

The product meets all requirements of the harmonized European standards. It therefore fulfills the legal requirements of the EU directives. TriOS Mess- und Datentechnik GmbH confirms the successful testing of the product by affixing the CE mark (see appendix).

2 Introduction

LISA UV is a photometer with a nominal wavelength of 254 nm, which cannot be changed. LISA UV is available in the variants “digital” and “analog”. This makes the sensor particularly suitable for monitoring systems in industry and for short research applications in the field.

The following chapters explain the correct operation of the LISA UV with all its functions and setting options.

2.1 Product identification

All TriOS Mess- und Datentechnik GmbH products are provided with a product label that clearly shows the product designation.

There is also a type plate on the device with the following information, which you can use to clearly identify the product:

LISA UV analog

Serial number
Product type
Power supply
Interface

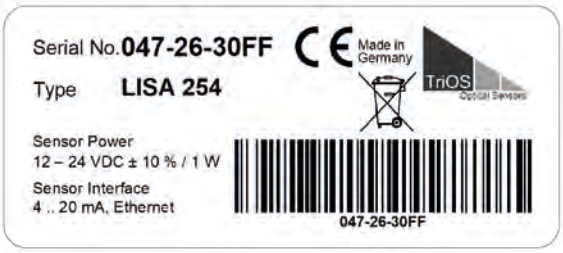

LISA UV digital

Serial number
Product type
Power supply
Interface

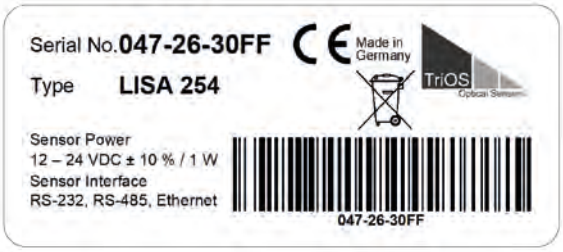

The nameplate also contains the product barcode, the TriOS Optical Sensors logo and the CE quality mark.

Please note that the specifications given here are for illustrative purposes only and may vary depending on the product version.

2.2 Scope of delivery

The delivery includes the following components:

1. Sensor
2. Operating instructions
3. Calibration certificate
4. Compressed air fitting
5. For analog version: M12 installation socket

Keep the original packaging of the device for possible return shipment for maintenance or repair purposes.

2.3 Measurement principle and structure

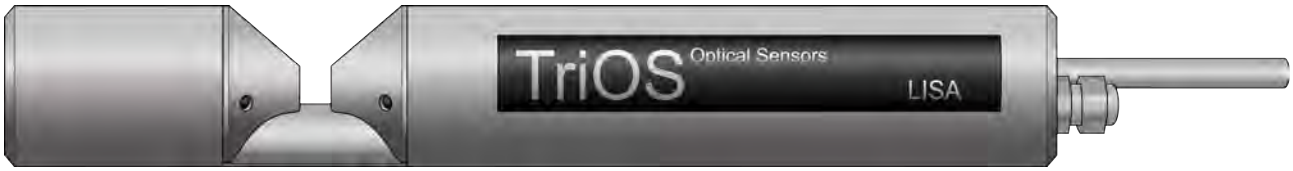

For optimal use of the sensor, it is inevitable to know and understand the idea and theory on which the sensor is based. The following is a thorough overview of the measuring principle, the optical arrangement and the subsequent calculation.

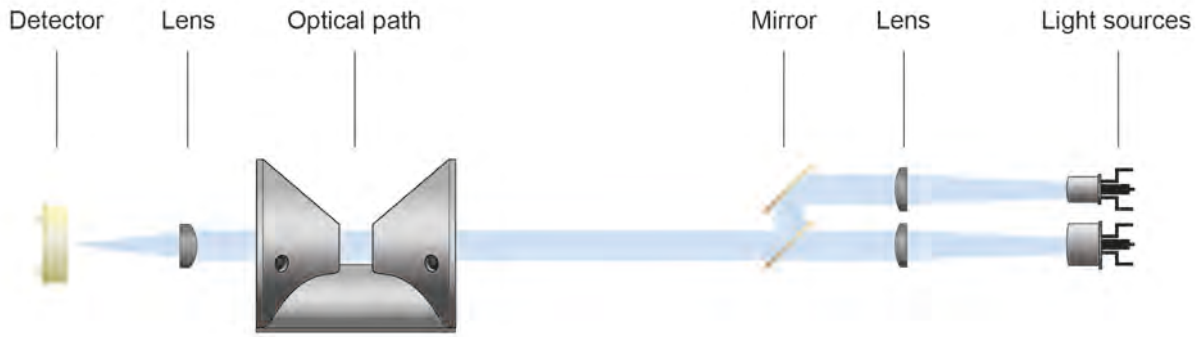

Essentially, the photometer consists of four parts: a defined light source, a lens system, the optical path through the medium and a spectrometer. The arrangement of these parts is shown schematically in the figure above.

The light source consists of two LEDs of different wavelengths. The wavelength of the first LED (LED 1) is 254 nm. The wavelength of the second LED (LED 2) is 530 nm. This wavelength is used for turbidity correction. Both LEDs are connected one after the other in a special profile.

The light passes through the medium in the optical path and is partially absorbed by the medium. The detector records the remaining light and thus determines its intensity I.

The light attenuation when passing through a measuring medium is compared with the light attenuation caused by ultrapure water. The measurement in ultrapure water provides the so-called base intensity I_0.

According to equation 1 and equation 2, the sensor determines the transmission T and the absorption A of both wavelengths mentioned above.

Equation 1: Calculation of transmission

$$T = \frac{I}{I_0}$$

Equation 2: Calculation of the absorption coefficient

$$A = -log_{10} T$$

with

T	Transmission in %
I	current light intensity
I_0	Basic light intensity for ultrapure water A
A	Absorption in AU (AU = absorbance unit)

The light intensity of LEDs often varies with temperature. A temperature correction factor is therefore determined for each wavelength of the LISA UV and used to calculate the measured value.

2.3.1 Spectral absorption coefficient SAC

LISA UV outputs the SAC of the wavelength of LED 1 at 254 nm. This is referred to below as SAC254. Accordingly, the absorption at the wavelength of LED 1 is referred to as A_{254}.

Scattering of light by particles in a solution becomes visible to the observer as turbidity. LISA UV uses the absorbance at 530 nm (A_{530}) for the turbidity correction of the absorbance measurement at the wavelength emitted by LED 1 (A_{254}). The SAC_{254} is calculated according to equation 3. In this equation, d is the optical path length in millimeters [mm]. The path lengths 0.3, 1, 2, 5, 10, 20, 50 and 100 mm are available for LISA UV.

Equation 3: Calculation of the spectral absorption coefficient at nominal wavelength 254

$$SAC_{254} = \frac{(A_{254} - A_{530}) \cdot 1000}{d}$$

with

d	Length of the optical path in millimeters [mm]
SAC	Spectral absorption coefficient in [1/m]

Equation 4: Calculation of the spectral absorption coefficient with measured absorption values

$$SAC_{254} = (Abs_{254} - Abs_{530})$$

with

Abs_{254}	Absorption in [1/m]
Abs_{530}	Absorption in [1/m]

2.3.2 Parameters

LISA UV uses two different LEDs for long-term stable measurements of SAC values. The following parameters (see table) can be measured or derived with LISA UV.

Parameters	Unit
SAC_{254} *	1/m
COD_{eq}	mg/L
BOD_{eq}	mg/L
TOC_{eq}	mg/L
$Turb_{530}$	FAU
Abs_{254}	1/m
Abs_{530}	1/m
$Trans_{254}$	%
$Trans_{530}$	%
SQI	1

* Based on DIN 38404-3

In addition, there are three freely selectable parameters (Custom#1, Custom#2, Custom#3) that can be derived, scaled and named from these parameters.

2.3.3 Calculation UVT_{254n} standardized to 10 mm

The parameter $Trans_{254}$ (= UVT_{254}) refers to the current path length. If UVT_{254} is to be calculated in relation to 10 mm (standard cuvettes), the following formula must be used:

$$UVT_{254n}\,mm\,[\%] = 100 \cdot 10^{\frac{-Abs_{254}\,[AU] \cdot 10}{\text{Path length}}}$$

with

Abs_{254}	Absorbance value measured at 254 nm in AU
Path length	Path length of the sensor used

2.4 Browser

The photometer is equipped with a web interface that can be used to configure and calibrate the sensor. To access the web interface, you need the G2 InterfaceBox and an Ethernet-capable device with a web browser, such as a notebook.

Open one of the following URLs in your web browser (depending on the structure of the network):

http://lisa/ or

http://lisa_3XXX/ (3XXX is the serial number) or

http://192.168.77.1/

If an Ethernet-capable device is connected, the automatic measurements are suspended. As soon as the sensor is disconnected from your device again, the measurements are continued at the set interval if the timer for automatic measurements is activated.

The web interface is divided into three areas (see illustration):

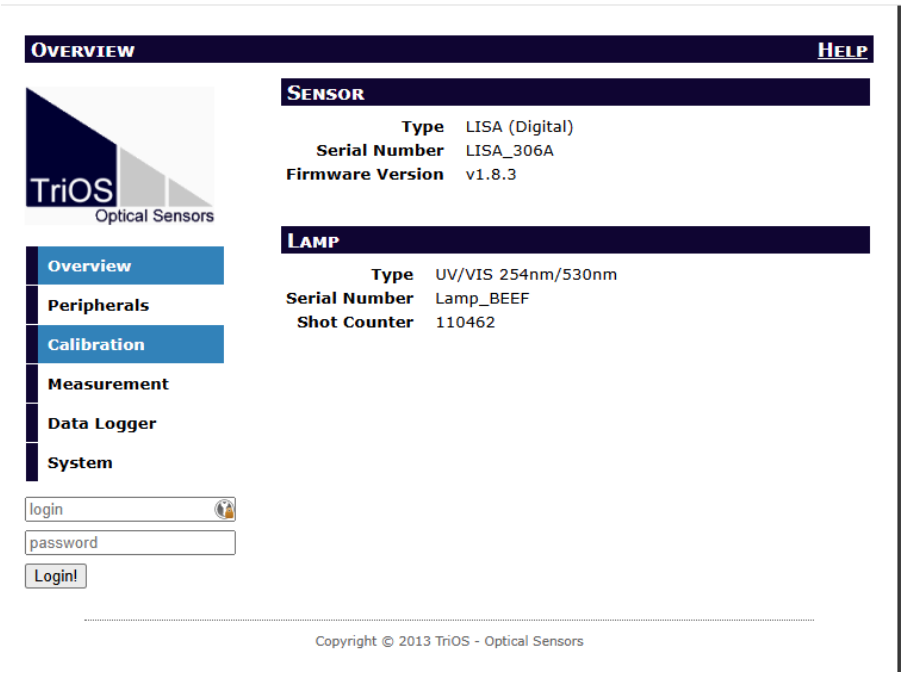

Three areas: Title at the top, Menu on the left and Content in the middle.

The name of the current page is displayed in the title. To the right is the info button. This shows the contact details of the relevant TriOS authorized dealer and TriOS Mess- und Datentechnik GmbH.

The individual pages are listed in the menu on the left. The name of the current page is highlighted in blue.

Below the menu is the login area, which certified TriOS service technicians can use to authenticate themselves. In most cases, problems can be solved here on site.

The menu is used to navigate the web interface. Each line is a link to a different page with correspondingly different setting options. The link to the currently displayed page is always highlighted in the menu. Special, selected content and functions are reserved exclusively for TriOS Mess- und Datentechnik GmbH technical support staff. Authentication is required for this content, so it is not accessible to everyone.

The “Content” area displays the relevant information and setting options. Content that requires authentication is deactivated (“grayed out”) if authentication fails or is not possible due to a lack of corresponding information.

Overview

Basic information about the sensor is summarized on the overview page (“Overview”, see above). This includes the device type and serial number of the sensor as well as the version number of the installed firmware. The type of lamp module with serial number is also listed, as is the number of measurements carried out by this lamp module.

Peripherals

Different options are available in the environment settings (Peripherals) depending on the variant of the sensor.

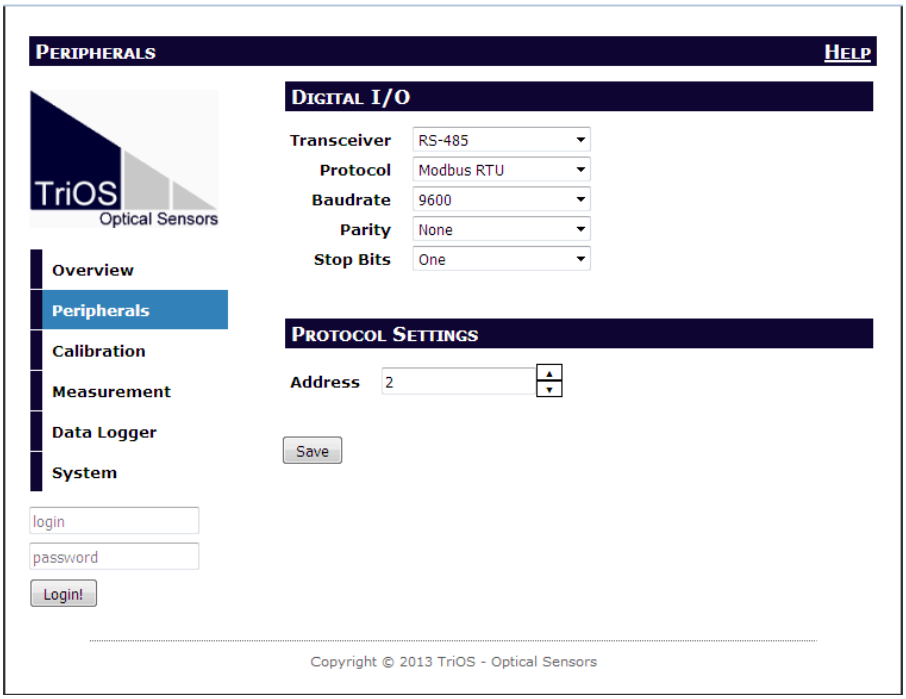

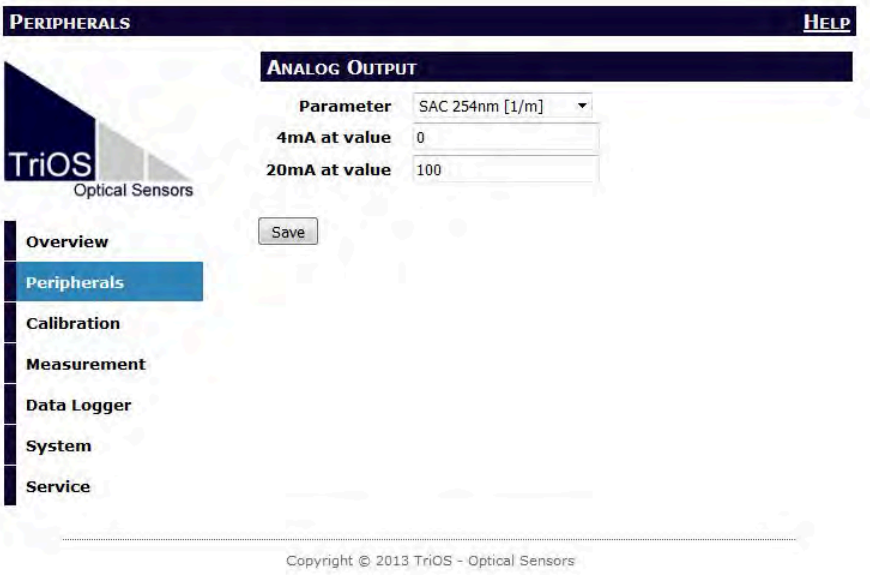

Calibration

On the “Calibration” page, the zero point for the sensor can be calibrated and the optical path length can be entered.

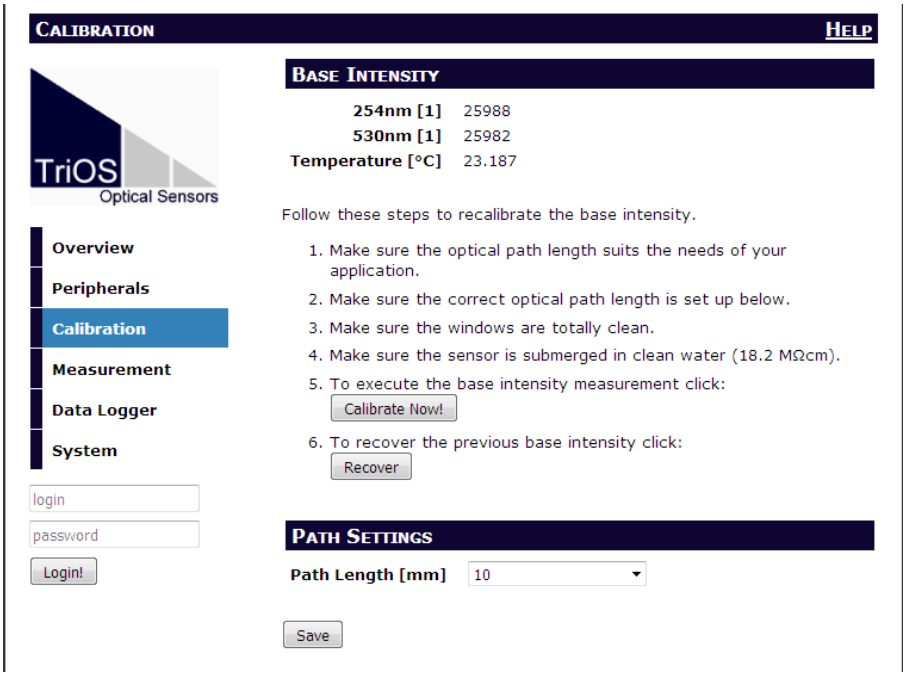

Measurement

The “Measurement” page shows the results of the last measurement carried out, as well as the settings for the interval for automatic measurements and the number of individual measurements to be averaged for the final measurement. It is also possible on this page to scale the measured value for the SAC_{254} [1/m] to the desired parameter using entries for “Offset” and “Scaling”. A new measurement can be triggered at any time. To do this, click on the “Measure Now!” button. A new measurement is then carried out with the saved settings. The parameters recorded include:

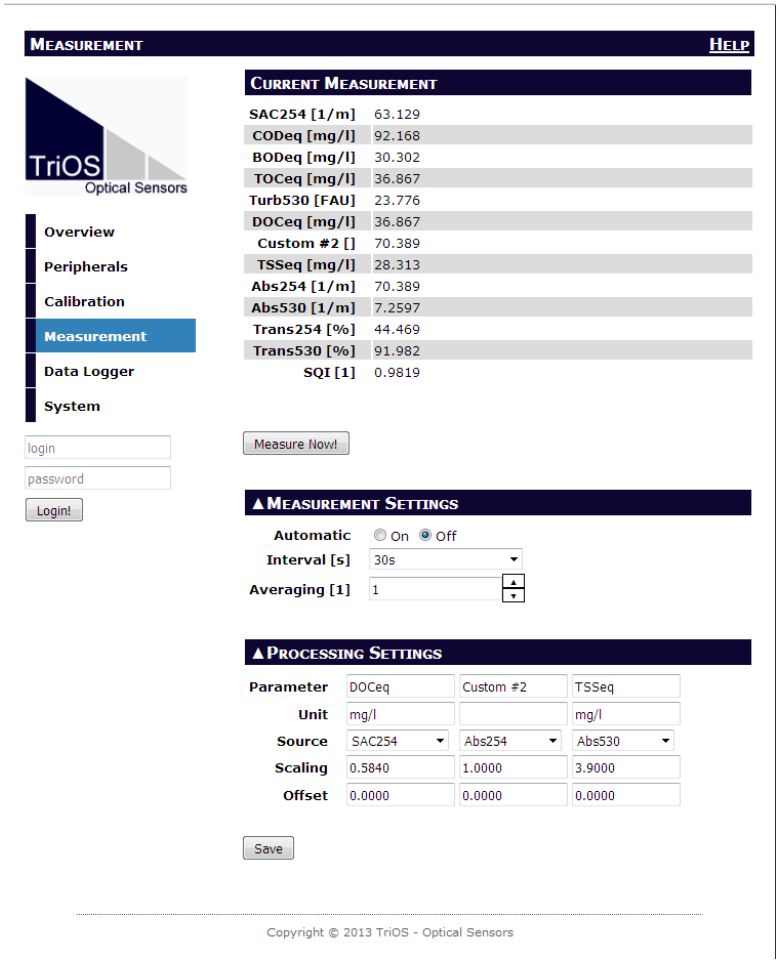

The example view shows the values of the following parameters:

SAC254 *	Absorption coefficient at 254 nm in 1/m
CODeq *	COD equivalent in mg/L
BODeq *	BOD equivalent in mg/L
TOCeq	TOC equivalent in mg/L
Turb530	Turbidity at 530 nm in FAU
Custom #1	Freely selectable parameter
Custom #2	Freely selectable parameter
Custom #3	Freely selectable parameter
Abs254	Absorption at 254 nm in 1/m
Abs530	Absorption at 530 nm in 1/m
Trans254	Transmission value at 254 nm in %
Trans530	Transmission value at 530 nm in %
SQI	Sensor Quality Index

* English sum parameters are listed in the browser. SAC = SAC, COD = CSB, BOD = BSB.

The time interval for automatic measurements is entered in the “Interval [s]” field. This interval is to be understood as a minimum value. If the previous measurement has not yet been completed after the interval has expired (e.g. because the LISA UV simply requires more time due to averaging), the system waits for this and starts the next one as soon as this is possible.

The measurement interval recommended by TriOS Mess- und Datentechnik GmbH and set at the factory is 60 s.

If several individual measurements are to be averaged for a measurement, this can be set in the “Averaging [1]” field. The number of individual measurements is entered here.

The SAC_{254} parameter [1/m] can be automatically calculated with a scaling factor and an offset for specific parameters. The scaling factor always depends on the application and, with the exception of the parameter predefined by the manufacturer, must be determined by the user. The values are entered in the corresponding “Scaling” and “Offset” fields. For more information on the scalable parameters, please refer to chapter 5.2 Customer calibration.

Important: Changed values must be saved by clicking on the “Save” button so that they are adopted for the following measurements.

Data logger

LISA UV is equipped with a simple data logger function that allows you to save approx. 28,000 measurements. This function is controlled via the “Data Logger” page, which is shown in the following illustration.

Data storage is started by activating “Save data”. In normal operation, each measurement is saved until the memory is full. The measurement interval is set to 60 seconds at the factory so that the data logger records the measurements for approx. 530 hours (22 days). If “Delete oldest data” is selected under “Storage full behavior”, only the last recorded measurement data is saved and old data is overwritten.

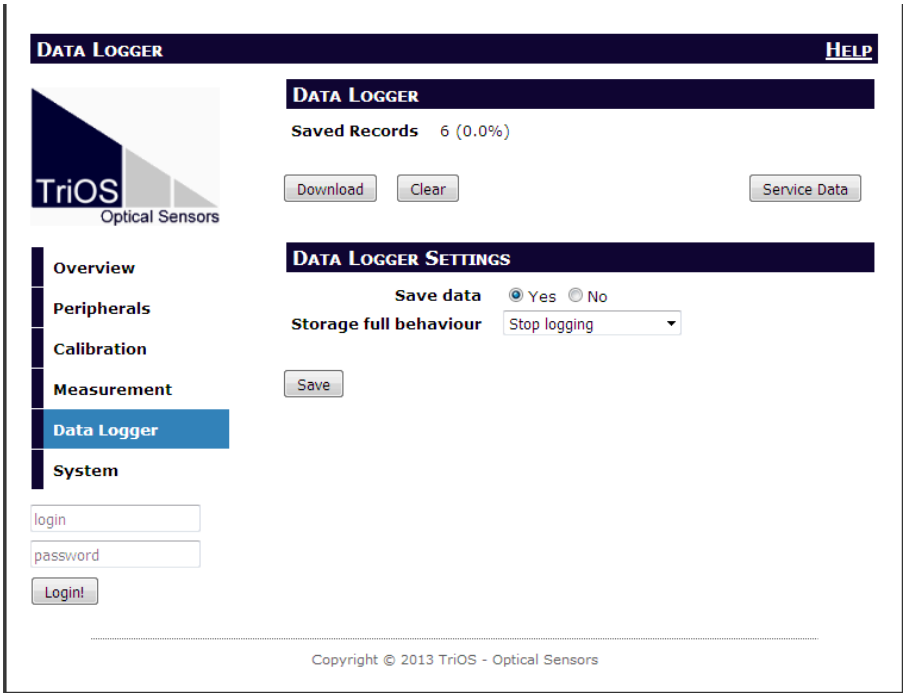

The previously saved data can be retrieved using the “Download” button. The sensor presents this as a CSV file (comma-separated values), which can be read by common spreadsheet programs. The “Clear” button can be pressed to delete data. If the subsequent security prompt is confirmed, all previously saved measurements are irrevocably deleted from the memory.

System

The “System” page is used to manage the sensor. Tasks on this page include uploading a calibration file and downloading the current calibration as a restore point.

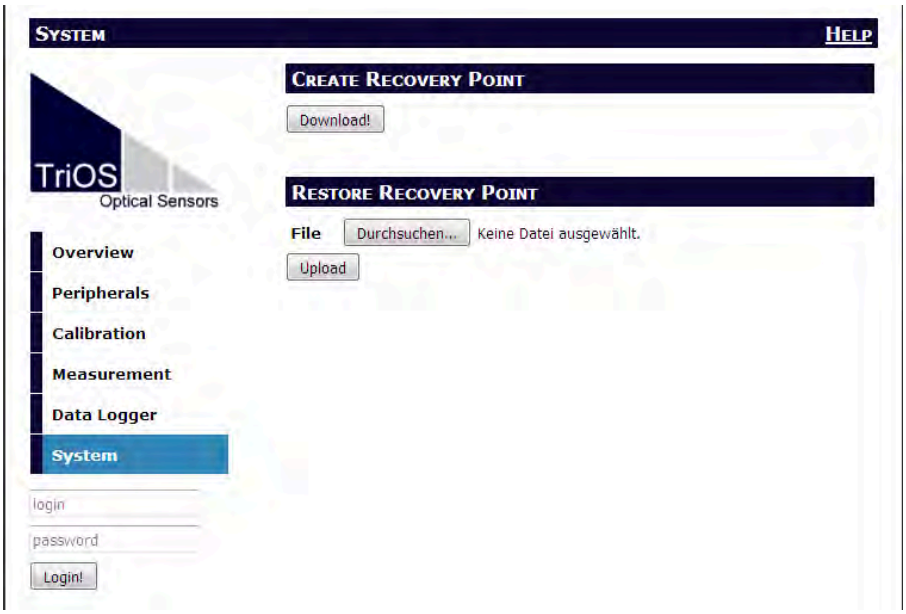

2.5 Login

To use the service function, you need a login and a password. You will receive this when you attend a TriOS training course.

3 Commissioning

This chapter deals with the Commissioning of the sensor. Pay particular attention to this section and follow the safety precautions to protect the sensor from damage and yourself from injury.

Before putting the sensor into operation, make sure that it is securely fastened and that all connections are made correctly.

3.1 Electrical installation

LISA UV is supplied either with a fixed cable with M12 industrial plug or with an underwater plug.

3.1.1 SubConn connector 8pin

Pin assignment

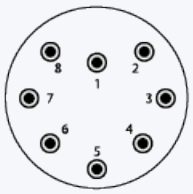

Variant digital	Analog variant
1. ground (power + serial interface)	1. ground (power + serial interface)
2. RS-232 RX / RS-485 A (commands)	2. analog out (4 .. 20 mA)
3. RS-232 TX / RS-485 B (data)	3. do not connect
4. power (12 - 24 VDC)	4. power (12 - 24 VDC)
5. ETH_RX-	5. ETH_RX-
6. ETH_TX-	6. ETH_TX-
7. ETH_RX+	7. ETH_RX+
8. ETH_TX+	8. ETH_TX+

Connection

Step 1

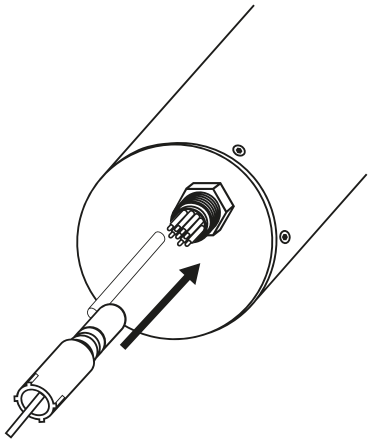

Plug the connector end of the connection cable onto the connector plug by aligning the pins with the slots on the cable.

Step 2

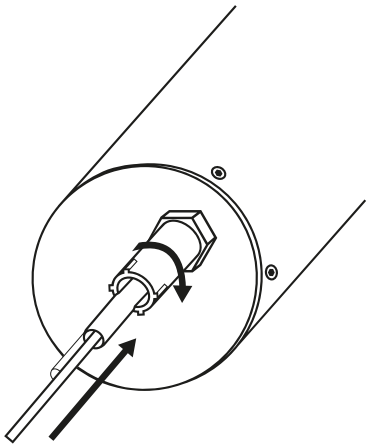

In the next step, turn the locking sleeve clockwise to secure the plug end to the bulkhead connector.

NOTICE

Do not bend the connection back and forth when inserting or removing it. Insert the connector straight and use the locking sleeve to tighten the pin contact.

3.1.2 Fixed cable with M12 industrial plug

Pin assignment

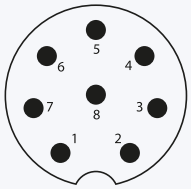

Face view (male)

Digital variant	Analog variant
1.RS-232 RX / RS-485 A (commands)	1. analog out (4 .. 20 mA)
2. RS-232 TX / RS-485 B (data)	2. do not connect
3. ETH_RX-	3. ETH_RX-
4. ETH_RX+	4. ETH_RX+
5. ETH_TX-	5. ETH_TX-
6. ETH_TX+	6. ETH_TX+
7. ground (power + serial interface)	7. ground (power + seral interface)
8. power (12 - 24 VDC)	8. power (12 - 24 VDC)

NOTICE

Ensure that the polarity of the operating voltage is correct, otherwise the sensor may be damaged.

3.2 Interfaces

3.2.1 Serial interface

The “Digital” variant of LISA UV is equipped with a configurable digital serial interface and provides two lines for digital serial communication with a control device. The RS-232 (also EIA 232) and RS-485 (also EIA 485) standards are supported and can be switched between via the web interface.

The RS-232 and RS-485 digital interfaces are voltage interfaces (as opposed to a current interface such as the analog output in the “Analog” variant). With RS-232, voltages from -15 V to +15 V are possible, with RS-485 from -5 V to +5 V, with respect to ground.

On delivery, LISA UV is configured for RS-485 with the following settings:

- Baud rate: 9600 bps

- Data bits: 8

- Stop bits: 1

- Parity: none

A detailed description of the Modbus protocol commands can be found in the appendix. With RS-232, data transmission takes place on one line in each direction, with the RX line being used for communication from control device to sensor and the TX line from sensor to control device.

RS-485 uses a differential signal, whereby the sign-negated potential of the A line is applied to the B line. The decisive factor is the difference A-B, which makes the transmission as robust as possible against interfering signals.

With the “Digital” variant, the digital interface can be configured in the web interface on the “Peripherals” page. The following setting options are available, as shown in the following illustration:

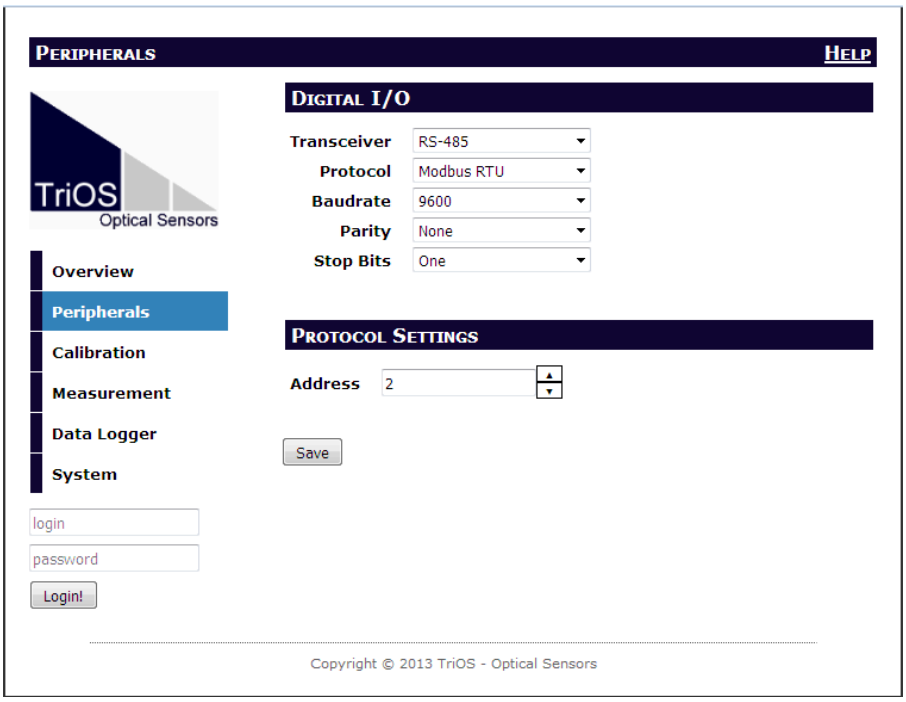

Transceiver

The electrical connection standard can be selected here. The following options are available:

- RS-232 (also EIA 232)
- RS-485 (also EIA 485)

Protocol

Specifies the data protocol to be used. Supported is:

- Modbus RTU

A detailed description of the Modbus RTU protocol for LISA UV can be found in the appendix.

Baud rate

Specifies the transmission speed.

> ***NOTICE***
>
> **If there are difficulties with communication, an attempt should be made to reduce the baud rate.**

Flow control

Activates flow control at software level (XON/XOFF).

> ***NOTICE***
>
> **This is only supported with the internal TriOS data protocol and must be deactivated when using Modbus RTU.**

Parity

Activates the parity check during data transmission. Possible options are:

- None (deactivated)
- Even
- Odd

Stop bits

Defines the number of stop bits.

NOTICE

For various Modbus devices, it may be necessary to set “Two” here if no parity check is to take place.

Settings for the active protocol can be made in the “Protocol Settings” section.

- The following properties are also available in the Modbus RTU protocol:
  - Address: This is the slave address for Modbus communication. It identifies the sensor in the bus system and must be unique.

3.2.2 Analog interface

With the “Analog” variant of LISA UV, a current regulator is used for the analog output. This has the advantage that the signal is not distorted by the internal resistance of the cable, even over long distances, as would be the case with a voltage regulator, for example.

The analog output is only available in the “Analog” variant of the sensor. An analog current signal is available via this output, which represents the measured value of the parameter set for the last measurement. The signal is always in the range from 4 mA to 20 mA. The 4 ... 20 mA output behaves linearly to the measurement range. To convert the values of the mA analog output into SAC [1/m], for example, the following formula must be applied:

If 4 mA = 0

$$\text{SAC} = \frac{\text{analog value[mA] - 4[mA]}}{\text{16[mA]}} \cdot \text{upper limit of the measuring range*}$$

* When determining the upper limit of the measurement range, the path length must be taken into account for the SAC (see table below *Output parameters SAC*)

If 4 mA ≠ 0:

$$\text{SAC} = \frac{\text{analog value[mA] - 4[mA]}}{\text{16[mA]}} \cdot \text{(upper limit - lower limit)}$$

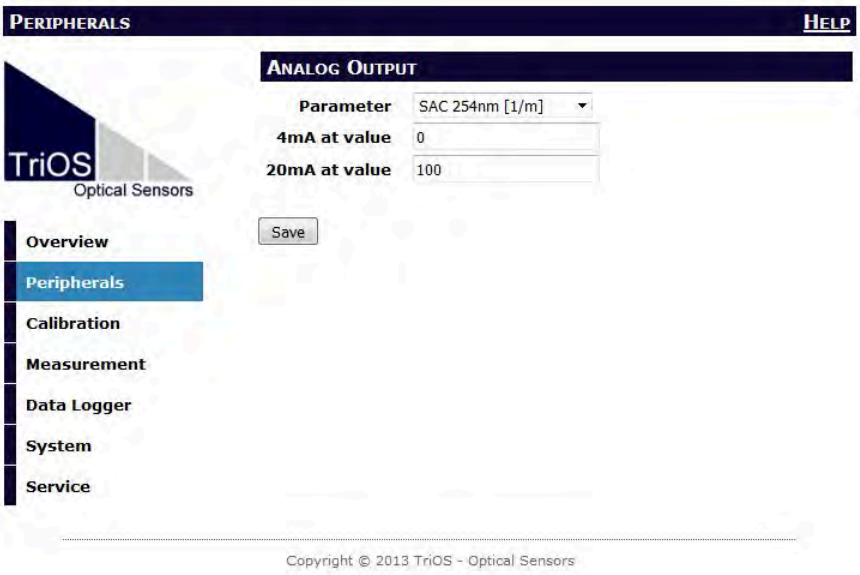

The “Analog” variant provides three options in the web interface on the “Peripherals” page: the parameter to be output as well as the lower and upper limit for the linear spread of the measured value to 4 .. 20 mA.

- Parameter: The measured parameter to be output via the analog output is set in this field.
- 4 mA at value: Specifies the lower limit for the linear spread of the measured value.
- 20 mA at value: Specifies the upper limit for the linear spread of the measured value.

Important: Changed values must be saved by clicking on the “Save” button so that they are accepted.

NOTICE

Note the measurement ranges of the parameters depending on the path length of the sensor!

Output parameter SAC_{254}

The table lists the SAC_{254} measurement range [1/m] as a function of the path length, which must be observed for the configuration of the analog output.

Path length [mm]	Measurement range SAC_{254} [1/m]
100	0...15
50	0...30
20	0...75
10	0...150
5	0...300
2	0...750
1	0...1500

The factory default setting for the analog output, e.g. for the 50 mm path, is configured as follows:

- SAC_{254} = 0 [1/m] corresponds to analog 4 mA

- SAC_{254} = 30 [1/m] corresponds to analog 20 mA

Transmission output parameters

The factory default setting for the analog output for transmission is configured as follows:

- 100 % transmission = 20 mA
- 0 % transmission = 4 mA

3.2.3 Network

The IEEE 802.3 10BASE-T compliant Ethernet interface is used as the universal interface for the new TriOS G2 sensors. This makes it possible to establish a connection to a single sensor or even to set up a complex sensor network.

Network with a single G2 sensor

The simplest way to establish a connection with the LISA UV is with the G2 InterfaceBox. It is used both to establish the connection and to supply power to the sensor and can be used universally for all TriOS G2 sensors.

The following figure shows a connection setup for a single sensor:

The TriOS G2 InterfaceBox converts the 8pin M12 sensor plug to the standard connections for the power supply (2.1 mm barrel connector) and for network access (RJ-45 socket).

G2 InterfaceBox

There are three connections on the housing of the G2 InterfaceBox:

1. Power supply 12 or 24 VDC; 2.1 mm barrel connector
2. Sensor connection 8pin M12
3. Ethernet connection RJ-45 socket

The G2 InterfaceBox WiFi differs slightly from the illustration shown here. Further information on the G2 InterfaceBox WiFi can be found in the operating instructions.

Proceed as follows to connect the sensor to an Ethernet-capable device using the G2 InterfaceBox:

1. Ensure that your device's Ethernet extension is configured to automatically obtain the network settings (IP address and DNS server).
2. Insert the M12 plug at the cable end of the sensor into the M12 socket (2) of the G2 InterfaceBox and close the screw cap.
3. Connect the 12 or 24 VDC power supply unit to the G2 InterfaceBox to supply the sensor with power.
4. Wait at least 3 seconds before finally connecting the LAN cable to your Ethernet-capable device and the G2 InterfaceBox.

The web interface can now be accessed with any browser via the URL

http://lisa/ or

http://lisa_3XXX/ (3XXX is the serial number) or

http://192.168.77.1/.

If the web interface cannot be called up, make sure that the LAN cable is connected after the sensor has been supplied with power and try all three URL options.

If an Ethernet-capable device is connected, the automatic measurements of the LISA UV are suspended. As soon as the LAN connection between the sensor and the Ethernet-capable device is disconnected, the measurements are resumed at the set interval, provided the timer is activated.

Network with multiple G2 sensors

Using an Ethernet switch or hub or commercially available router, it is possible to connect several sensors in a complex network and use them simultaneously. In the sensor network, each sensor requires its own G2 InterfaceBox for the power supply.

Like every G2 sensor, LISA UV provides a simple DHCP server and a simple DNS server, which are configured exclusively for direct individual connection - as described in the previous section. For a complex sensor network, it is necessary for these servers to be provided by the user. LISA UV recognizes them automatically and then switches off the internal servers. Ask your network administrator for advice on how this can best be implemented in your case.

The following illustrations show examples of different ways to set up a sensor network:

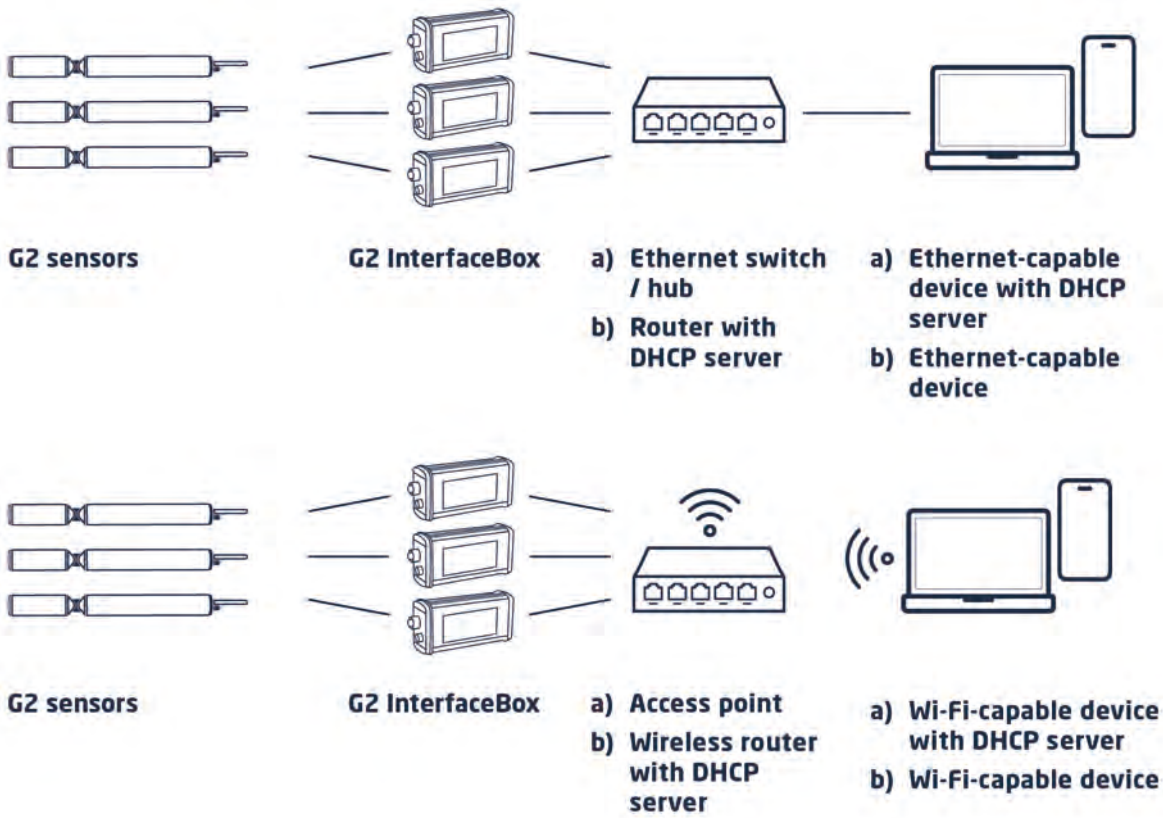

LISA UV can only be used from one Ethernet-capable device at a time.

If several sensors are used in a network, the web interface can be accessed via the host name http://lisa_3XXX/ (3XXX is the serial number) or via the IP. Ask your network administrator for advice.

NOTICE

Damage caused by improper use is excluded from the warranty!

4 Application

LISA UV can be operated with all TriOS controllers. You will find notices for correct installation in the operating instructions for the controller.

NOTICE

Never transport the sensor just hanging on the cable.

4.1 Normal operation

4.1.1 Diving operation

For diving operation, the LISA UV can be completely or partially immersed in the water/measuring medium. For a correct measurement, the optical window must be completely submerged and free of air bubbles. Use the mounting rod with a shackle and a stainless steel chain or steel wire to suspend the device in the medium. Do not carry or pull the sensor by the sensor cable.

LISA UV can also be attached using suitable hydraulic clamps as shown in the illustration below. Make sure to use suitable brackets with an inner diameter of 48 mm (not for deep sea version). To protect the housing tube from excessive punctual pressure, mount the clamps close to the device covers. Suitable brackets can be obtained from TriOS.

Attachment to the shackle

Fastening with hydraulic clamps

The sensor should be installed at right angles to the direction of flow. This minimizes deposits on the windows and optimally supports the function of the nano coating.

When immersing the sensor, make sure that there are no air bubbles in front of the sensor windows. If there are air bubbles in front of the window, shake the sensor cautiously until the bubbles are removed.

4.1.2 Cleaning system

LISA UV and all other sensors from TriOS Mess- und Datentechnik GmbH are equipped with an innovative anti-fouling technology to prevent soiling and dirt on the optical window: nanocoated windows in combination with a compressed air cleaning system.

Nano coating

All TriOS optical windows are treated with a nano coating.

Windows without nano coating

Windows with nano coating

The wettability of the surface on the coated glass is significantly lower. This effect is achieved by the nano-coated surface of the glass, to which no dirt adheres. In combination with compressed air cleaning, the windows are kept clean over long periods of time, reducing the amount of cleaning required.

Compressed air cleaning

LISA UV can be modified with the optional compressed air cleaning head. The head has an air outlet directly on the window of the device and a hose fitting for connecting compressed air.

TriOS controllers have valves that can be used to set fixed flushing intervals under software control. Compressed air between 3 and 6 bar must be provided for this.

NOTICE

The optimum pressure for compressed air cleaning is between 3 and 6 bar. The total length of the hose should not exceed 25 meters. Suitable hoses are available from TriOS (polyurethane, 6 mm outer diameter, 4 mm inner diameter)

To connect the hose, simply push the hose into the appropriate connection. To disconnect it again, push the blue locking ring towards the connection and pull the hose out. If necessary, secure the hose to the device and cable with cable ties to prevent uncontrolled flailing of the compressed air hose.

NOTICE

The pressure must not exceed 7 bar! Valve damage could occur!

Compressed air flushing can affect the measurement results. Therefore, the flushing intervals should be sensibly controlled.

4.1.3 Float

The float is the ideal solution for applications with fluctuating water levels.

4.2 Bypass installation

With the optional FlowCell, LISA UV can be installed as a bypass. Together with the flow cell, a panel is available on which LISA UV and the flow cell can be mounted easily and at an optimum angle.

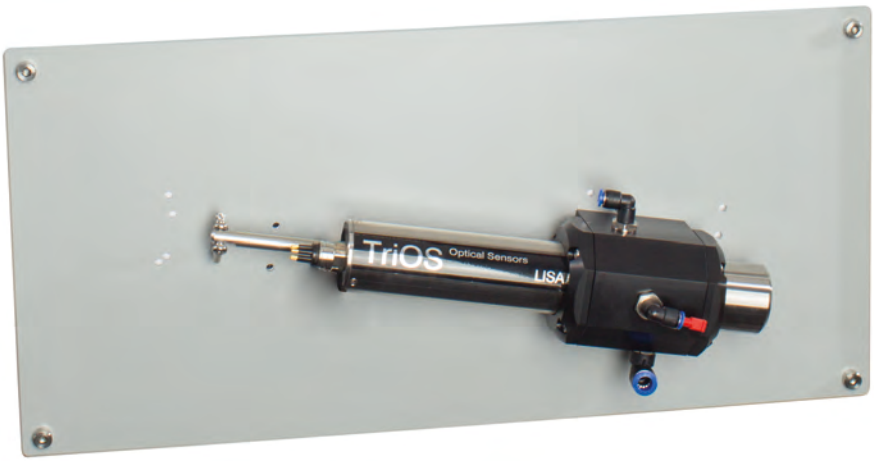

NOTICE

The maximum pressure in the flow cell must not exceed 1 bar. Make sure that the sensor is installed in the correct position to ensure a free flow of water.

The FlowCell has three hose connections. The inlet has an 8 mm hose connection and is located on the right-hand side of the flow cell. On the left side of the cell is a 6 mm drain hose connection.

Finally, there is a third hose connection at the top of the cell that can be used for cleaning with liquids. If this inlet is not used, it should be closed with a plug.

FlowCell dimensions according to path length

As LISA UV is available in different path lengths, the dimensions of the associated flow cell vary accordingly as described in the following table:

Path length [mm]	x [mm]	y [mm]	z [mm]
up to 10	33,5	62	108
20, 50 and 100	32,5	96	150

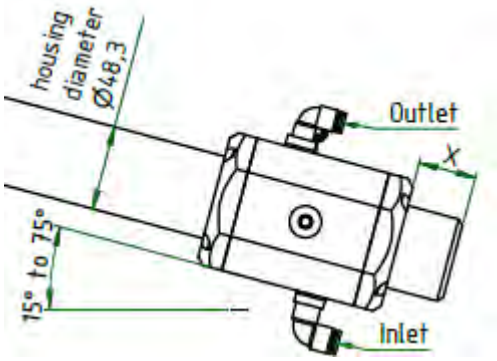

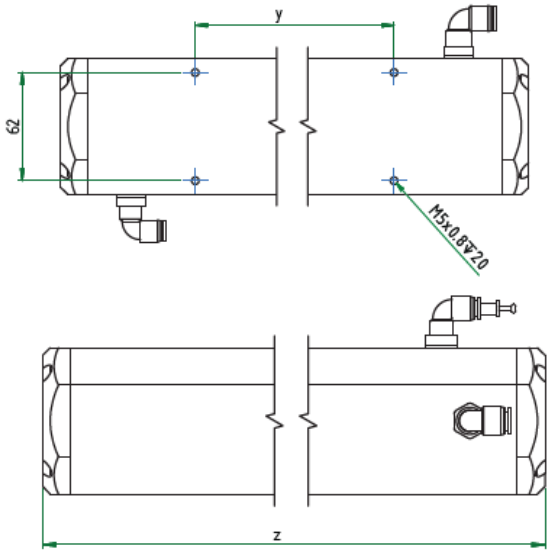

The hoses are installed by applying light pressure to the hose connectors. To remove the hoses again, press on the locking ring on the hose connector and gently pull on the hose.

NOTICE

The flow cell cannot be combined with compressed air purification.

Installation of the sensor in the FlowCell

To install the sensor in the flow cell, please proceed as follows:

1. Remove the two end caps and the two sealing rings by loosening the eight screws.
2. Slide the sensor into the flow cell and fix it in the correct position. All openings must be free so that the liquid flowing through can flow directly through the optical path. The back of the sensor should point towards the bottom of the flow cell. The screw heads on the tube ends should disappear completely into the flow cell so that the sensor is centered in the flow cell.
3. Slide one sealing ring each over the sensor into the grooves provided in the flow cell. Before final assembly, check the sealing rings for damage and use new ones if necessary. The sealing rings (48 x 5 mm NBR) are available as spare parts from TriOS Mess- und Datentechnik GmbH.
4. When the position of the sensor is correct, install the two end caps and secure them again with the eight screws.

The flow cell and the sensor should be installed at an angle between 15 ° and 75 ° to the horizontal so that neither air bubbles nor sinking dirt particles interfere with the measurement. After installation, check for leaks and a free flow of water.

4.3 Pipe installation

LISA UV can be mounted directly into the pipe, either with the special flange version of the sensor or by on-site installation by the customer.

In case of a grounded pipe, no additional grounding of the sensor housing is required (as long as no insulation is mounted between the pipe and the sensor).

One of the available flange solutions from TriOS is shown in the illustration below.

The maximum pressure must not exceed 5 bar.

Groove nut, gasket and weld-on socket are not offered by TriOS.

Use suitable material alloys. The sensor housing is designed for installation on the pipe connection in accordance with DIN 11851.

Pipe connection DN50 per DIN 11851 without compressed air connection

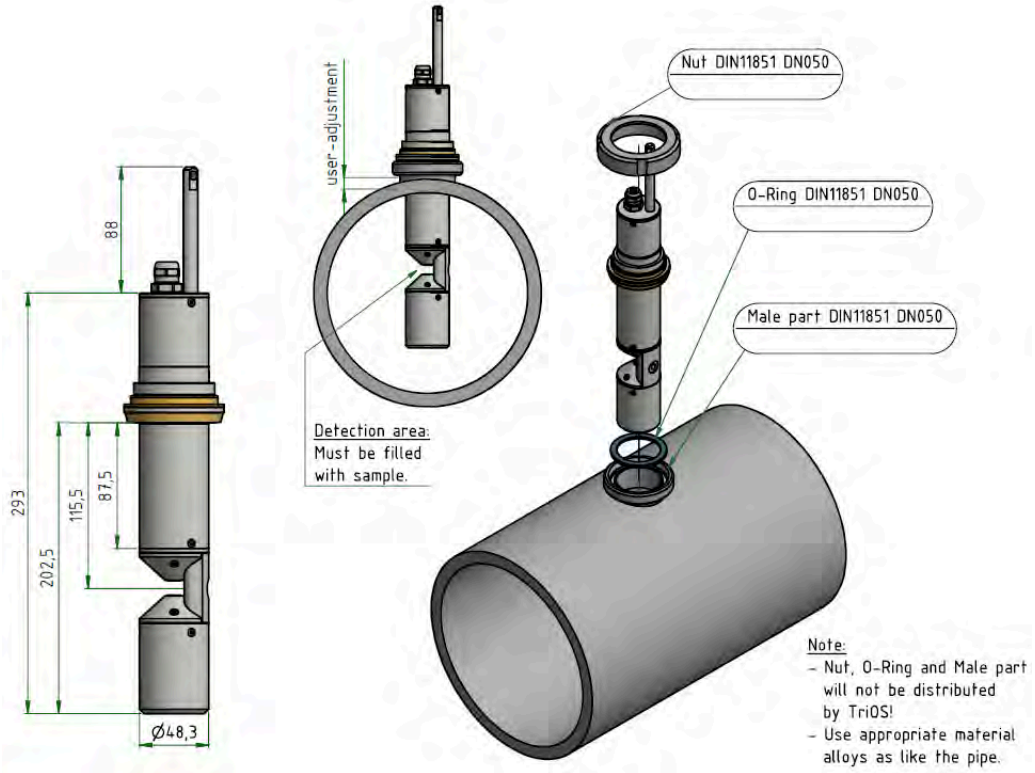

Pipe connection DN80 per DIN 11851 with compressed air connection

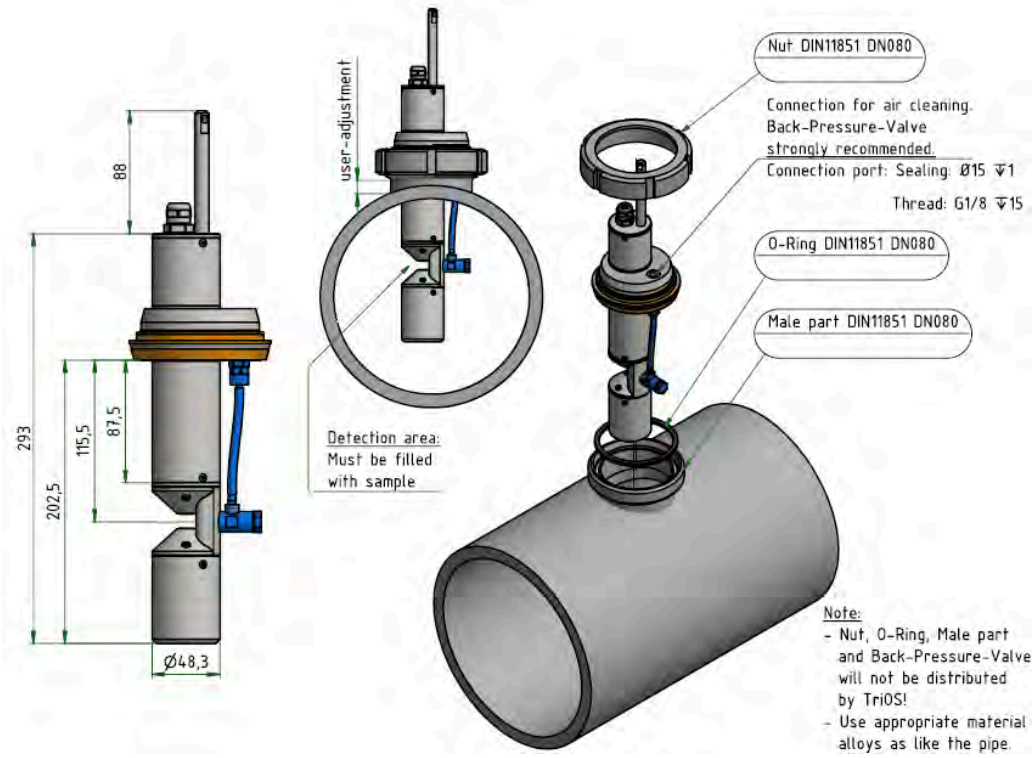

4.4 Use with cuvette

For laboratory measurements and very small amounts of water, LISA UV with 10 mm path or longer can be equipped with a cuvette holder (art. no. 10A200000) for standard 5 mm cuvettes.

For measurements with cuvettes, it is unavoidable to set a new zero point. Before recording a new zero point, the existing calibration should be downloaded and saved so that it can be uploaded again later when the sensor is used in the immersed state (see chapter 6.3.1 for the restore point).

5 Calibration

5.1 Manufacturer calibration

All TriOS sensors are supplied calibrated. The calibration factors of the LISA UV are stored in the sensor, i.e. all output values (digital and analog) are calibrated values.

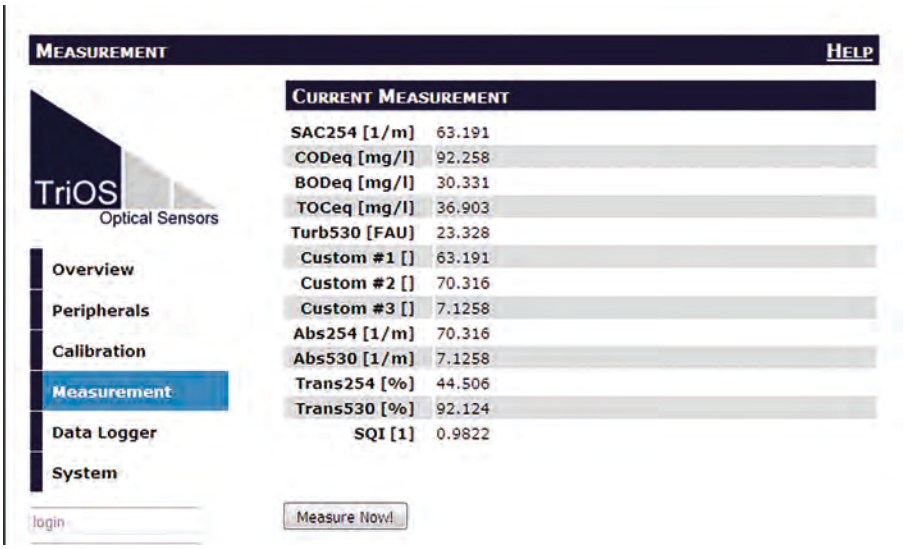

The conversion from the spectral absorption coefficient to the scaled measurement parameter is carried out using the following equations.

The offset and scaling factor are stored in the sensor for the measurement parameter.

The manufacturer calibration of the sensor is carried out as follows:

- The offset is determined by measuring in ultrapure water (free of humic and fulvic acids, 18.2 MΩcm water)

  A= **Raw - Offset**

- The scaling factor for each measurement range is determined by using the respective calibration standard.

  B= **A · lin**

with

A	Offset corrected value
Raw	Raw data
offset	Offset value
B	Concentration of the substance in physical units
lin	Scaling factor

NOTICE

The manufacturer calibration should not be changed!

5.2 Customer calibration

The sensor can be adapted to laboratory analyses and local conditions with other calibration factors. This is set either with the scaling function of the controller or directly in the browser of the sensor. To do this, open the “Measurement” submenu in the browser. The customer calibration or local calibration works in addition to the manufacturer calibration, the values of which are not changed by the customer calibration.

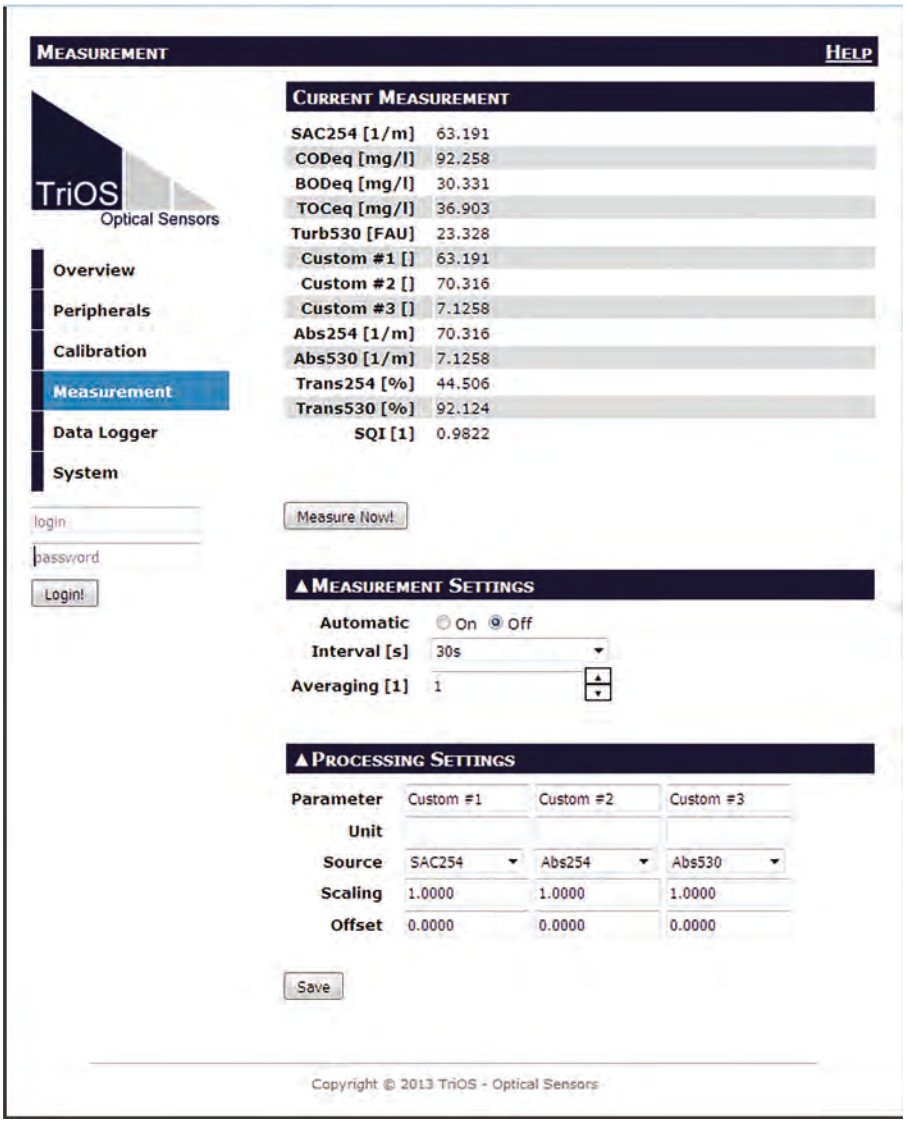

The customer calibration serves as a fine adjustment of the sensor to special media and supplements the manufacturer calibration.

Before recording measured values with your reference solutions, check the zero point of the sensor. If necessary, determine a new zero point (see chapters 6.2.1 and 6.3.1).

The local calibration is adjusted using a linear equation. Two constants are required for this: Scaling factor (scaling) and offset - which are used according to the following equation:

A = SAC - offset

B = A - scaling

With A as the SAC output, which is output by LISA UV.

A Offset corrected value

offset	Offset value
B	Customer calibrated parameter

For local calibration, at least two data points consisting of the laboratory value and the sensor value are required. The easiest way to achieve this is to use a non-contaminated and a contaminated sample.

1. The uncontaminated sample is used to determine the offset. To do this, immerse the photometer in the uncontaminated liquid. In this special case, the signal directly indicates the value of the offset for the local calibration.

   Offset = measured value1

   If no uncontaminated sample is available, the equation listed under 5. offers another option.
2. Now immerse the sensor in the contaminated medium and note the measured value2 that the photometer outputs and carry out a laboratory analysis of the sample.
3. Create a diagram as shown below and connect the two data points with a straight line. The slope of the straight line is the scaling factor.

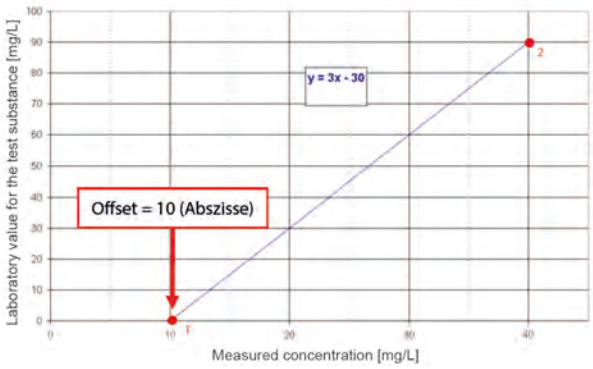

4. The scaling factor can be calculated using the following equation:

$$scaling\ factor = \frac{lab}{measuredvalue2 - offset}$$

with *laboratory* for the laboratory values and *measured value* for the values output by the sensor.

This means for the example in the picture above:

$$scaling\ factor = \frac{90\,mg/L}{(40 - 10)\,mg/L} = 3$$

5. If no sample not contaminated with PAH is available, you need at least two samples with as different PAH contamination as possible. In this case, the scaling factor is calculated first.

$$scaling\ factor = \frac{(lab2 - lab1)}{(measuredvalue2 - measuredvalue1)}$$

Calculation of the offset without zero point measurement (1.) :

$$offset = measuredvalue2 - \frac{lab2}{Scaling\ factor}$$

Measured value2 should be significantly greater than *measured value1*.

The offset is also determined by the abscissa of the straight line (X-axis intersection).

This means for the example given:

$$scaling\ factor = \frac{90 - 30}{40 - 20} = 3$$

$$offset = 40 - \frac{90}{3} = 40 - 30 = 10$$

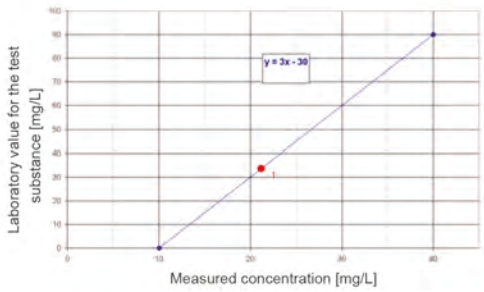

All TriOS controllers have the option of setting scaling factors and offset values for measurement parameters.

Please refer to the relevant manual.

Make absolutely sure that you do not perform double scaling for the sensor: On the one hand directly in the G2 sensor menu and on the other via the TriOS controller!

The customer calibration serves as a fine adjustment of the sensor to special media and is not intended to replace the manufacturer calibration.

NOTICE

Measurement ranges and detection limits of the scaled parameters depend on the scaling factor!

5.3 Measurement properties

Ideally, the optical path is chosen so that the absorption at 254 nm (Abs254) is not greater than 1.5 AU and the absorption at 530 nm (Abs530) is not greater than 0.5 AU. If the absorption at 254 nm is greater than 2 AU or at 530 nm is greater than 0.8 AU, the measured values may deviate significantly or can no longer be calculated (output: NAN)

The path length must be chosen depending on the absorption level of the medium.

Absorption limits at 254 nm and 530 nm in AU and 1/m

	Min.	Max.	Min.	Max.	Min.	Max.
Abs_{254} [AU]	**0.005**	**1.5**	**1.5**	**2**		**> 2**
Path 1 mm [1/m]	5	1500	1500	2000		2000
Path 2 mm [1/m]	2.5	750	750	1000		1000
Path 5 mm [1/m]	1	300	300	400		400
Path 10 mm [1/m]	0,5	150	150	200		200
Path 20 mm [1/m]	0.25	75	75	100		100
Path 50 mm [1/m]	0.1	30	30	40		40
Path 100 mm [1/m]	0.05	15	15	20		20
Abs_{530} [AU]		**≤ 0.5**	**0.5**	**0.8**		**> 0.8**
Path 1 mm [1/m]		500	500	800		800
Path 2 mm [1/m]		250	250	400		400
Path 5 mm [1/m]		100	100	160		160
Path 10 mm [1/m]		50	50	80		80
Path 20 mm [1/m]		25	25	40		40
Path 50 mm [1/m]		10	10	16		16
Path 100 mm [1/m]		5	5	8		8

If a negative value results from the difference (A_{254} - A_{530}) during the calculation of the SAC, the result is invalid and output as NaN. In such a case, the zero point should be checked.

6 Malfunction and maintenance

To ensure error-free and reliable measurement, the device should be checked and maintained at regular intervals. To do this, the sensor must first be cleaned.

6.1 Cleaning and care

Deposits (fouling) and dirt depend on the medium and the duration of exposure to the medium. Therefore, the degree of soiling depends on the application. For this reason, it is not possible to give a general answer as to how often cleaning of the sensor is necessary.

Normally the system is kept clean by the nano-coated window and additionally by the air purification system. If the soiling is too severe, the following instructions should be followed.

NOTICE

Damage caused by improper cleaning is not covered by the warranty!

6.1.1 Housing cleaning

⚠ CAUTION

Please use protective goggles and gloves when cleaning the sensor, especially if acids or similar are used for cleaning.

To remove solid dirt, we recommend soaking the sensor in a rinsing solution for a few hours. Exposed plug connections should be avoided during any cleaning so that they do not come into contact with water. For this purpose, please always ensure that the locking cap of the connector is firmly closed during cleaning. Please inform yourself thoroughly about the risks and safety of the cleaning solution used.

If the sensor is very dirty, additional cleaning with a float may be necessary. You should exercise extreme caution to avoid scratching the glass of the optical path.

In case of calcification, a 10% citric acid solution or acetic acid solution can be used for cleaning.

Brownish dirt or dots may be contamination from iron or manganese oxides. In this case, a 5% oxalic acid solution or 10% ascorbic acid solution can be used to clean the sensor. Please note that the sensor should only come into contact with the acids briefly and then be rinsed thoroughly with water.

NOTICE

Under no circumstances should the sensor be cleaned with hydrochloric acid. Even very low concentrations can damage stainless steel components. In addition, TriOS Mess- und Datentechnik GmbH warns against the use of other strong acids, even if the sensor has a titanium housing.

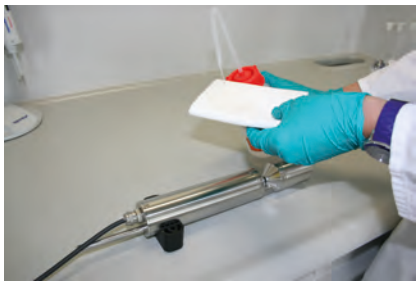

6.1.2 Cleaning the measuring window

You can clean the optical windows with a lint-free cloth, a clean paper towel or a special optical paper from TriOS Mess- und Datentechnik GmbH with a few drops of acetone. Make sure that you do not touch the window surface with your fingers!

To make cleaning the optical windows easier, TriOS Mess- und Datentechnik GmbH offers a cleaning set with acetone and special optical cleaning paper.

NOTICE

Do not use harsh cleaning solutions, spatulas, sandpaper or cleaning agents containing abrasive substances to remove stubborn dirt.

Damaged windows can be replaced by TriOS Mess- und Datentechnik GmbH customer service. Please contact our technical support at support@trios.de or your dealer.

NOTICE

Carry out a new zero point measurement after replacing optical windows.

NOTICE

When replacing the optical windows, make sure that the o-ring is inserted.

6.2 Maintenance and inspection

NOTICE

Avoid any contact with the glass parts in the optical path, as these can become scratched or dirty. As a result, the functionality of the device is no longer guaranteed.

6.2.1 Checking the zero point

Prepare the sensor for the zero point check as described in the previous chapter.

We recommend using the TriOS VALtub to check the zero point, as this seals the optical path optimally and enables a quick zero point check. Make sure that the VALtub's o-rings are positioned exactly on the sensor's seals.

Alternatively, another vessel suitable for immersion can be used. The optical path must always be completely immersed in the water during the measurement.

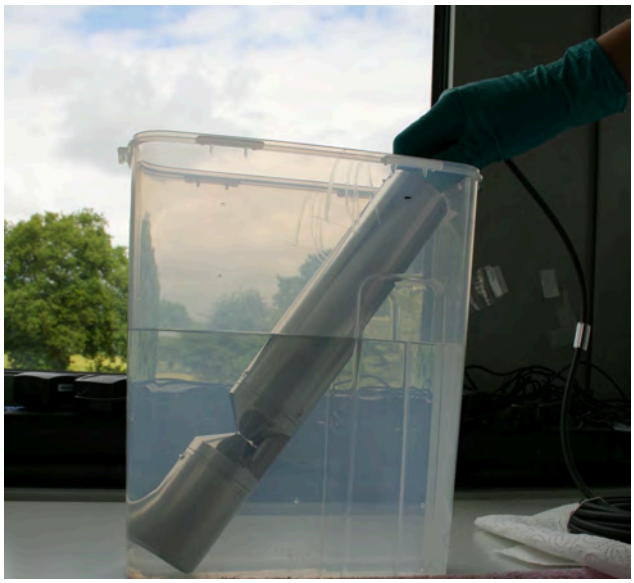

The zero point of the LISA UV is checked via the web interface. To access the web interface, you need the G2 InterfaceBox and an Ethernet-capable device with a web browser, such as a notebook.

Before the zero point check, the sensor is prepared as follows:

Clean the sensor as described in chapters 6.1.1 Housing cleaning. At the end of cleaning, rinse the sensor carefully with deionized water. Dry it with a paper towel and wipe the sensor with a little acetone on a kitchen towel to remove grease residues.

⚠ CAUTION

Always wear suitable gloves and safety goggles for your own protection!

Clean the windows of the sensor with special optical paper or a soft, lint-free cloth and a little acetone according to the instructions for cleaning the measuring window.

Important: Then polish the windows with a dry, soft tissue or special optical paper to remove any thin film that may appear while cleaning the windows.

Provide a suitable measuring vessel filled with ultrapure water. The measuring vessel should be carefully cleaned with detergent solution before use and then rinsed with ultrapure water.

Immerse the sensor in the vessel sufficiently filled with ultrapure water so that the optical windows are completely covered with water. Wait 10 - 15 minutes. During this time, hidden dirt can be removed from the sensor.

Remove the sensor from the water and rinse it with ultrapure water. Fill the container with fresh ultrapure water and immerse the sensor again. Lift the sensor and move it slightly in the water to remove any air bubbles. You can now check the zero point via the web interface.

If possible, the sensor should be in an inclined position in the measuring vessel or in a horizontal position in the VALtub to avoid an accumulation of very fine, barely visible air bubbles at the upper optical window. When using a stationary measuring cylinder in which the sensor is positioned vertically, particular attention should be paid to air bubbles in the optical path.

Ensure sufficient stability!

If possible, carry out the zero point test at an ambient temperature of 20 °C. The temperature of the ultrapure water should also be 20 °C.

General notices:

- Do not touch the part of the sensor that is immersed in the ultrapure water with your hands unless you are wearing gloves during the sensor test.
- Be sure to use ultrapure water (ultra pure, resistance of 18.2 MΩcm) or distilled water.
- If impurities appear in the water during the test, it must be replaced!
- Make sure that there are no air bubbles in front of the optical windows.

It is recommended to carry out at least 5 individual measurements under “Measurement” before the test in order to bring the sensor up to operating temperature.

NOTICE

Damage caused by improper cleaning is not covered by the warranty!

Limit values for zero point determination

In order to obtain reliable values, a defined value range should not be exceeded when checking the zero point.

SAC

If the measured value for the SAC_{254} in ultrapure water is more than specified in the following table, clean the optical windows again and repeat the zero point check. If the value exceeds the limit value again, first check

the settings of the sensor and the current measuring device. If the sensor settings are correct and errors in the output system can be ruled out, the sensor should be recalibrated.

Path length [mm]	Permitted minimum measured value range for SAC_{254} [1/m]	Permitted maximum analog output [mA]
100	0...0,5	4,53 [1]
50	0...1	4,53 [1]
20	0...2,5	4,53 [1]
10	0...5	4,53 [1]
5	0...10	4,53 [1]
2	0...25	4,53 [1]
1	0...50	4,53 [1]

For analog LISA with 10 mm path:

SAC 0 [1/m] corresponds to 4 mA

SAC 150 [1/m] corresponds to 20 mA

[1]Calculation: value Analog [mA] = $\frac{x - min}{max - min} \cdot 16\ mA + 4\ mA$ with min < x < max

x = max. value from minimum measurement range in [1/m]

min = lower limit

max = upper limit

Transmission

Check the zero point with approx. 5 measured values

- Start the measurements on the controller with an interval of 60 s or carry out approx. 5 individual measurements via the web interface. Document the following measured values:
  Transmission 254 nm and Transmission 530 nm.
- If the transmission reading is less than 90 %, repeat the cleaning of the optical windows and check the zero point again.
- If the transmission display is repeatedly below 90 %, the sensor should be recalibrated or a new zero point measurement should be carried out in ultrapure water (see chapter 6.3.1).

Zero point with analog output

As a rule, the zero point of the SAC_{254} measured value corresponds to an analog output of 4 mA.

The zero points for transmission indicate a transmission value around 100 %. As a rule, this value corresponds to an analog output of 20 mA.

If there is a deviation of more than 10 % transmission, which corresponds to less than 18.4 mA analog (display 90 % transmission), first check the settings of the sensor and the current measuring device. If the sensor settings are correct and errors in the output system can be ruled out, the sensor should be recalibrated or a new zero point measurement should be carried out (see chapter 6.3.1 “Determining a new zero point”).

6.2.2 Checking the maximum value

The maximum value can only be checked using the two transmission values.

Hold a piece of cardboard in the optical path so that no light can fall on the detector. The following measured value shows 0 % transmission. As a rule, this value corresponds to an analog output of 4 mA. If this value is above 4.5 mA (corresponding to 3 % transmission), first check the settings of the sensor and the current meter. If the settings of the sensor are correct and errors in the output system can be ruled out, the technical support of TriOS Mess- und Datentechnik GmbH should be contacted.

6.3 Troubleshooting

6.3.1 Determining a new zero point

Before you determine a new zero point, we recommend that you save your existing calibration so that it can be restored at a later date.

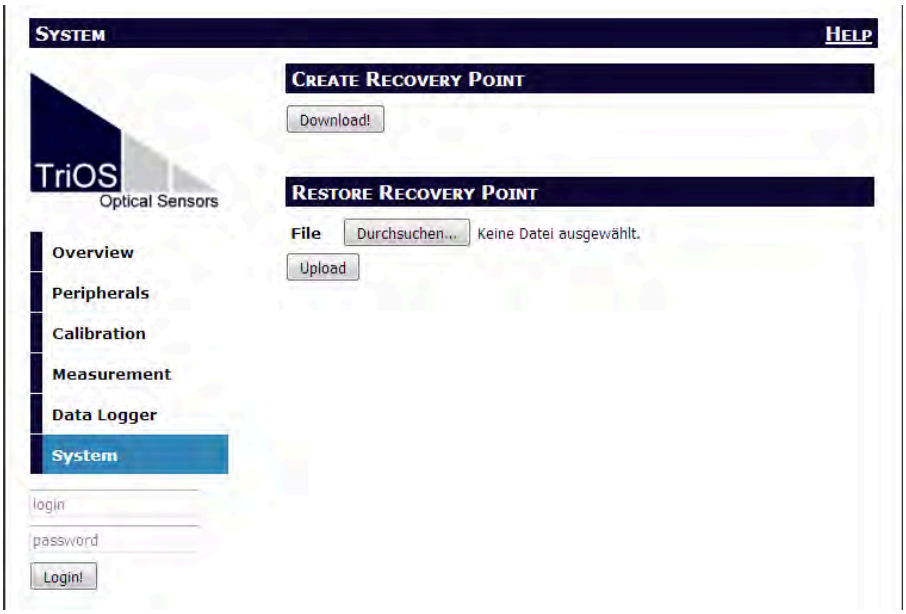

By clicking on the “Download” button, you can download the current calibration from the sensor and save it on a PC, for example. LISA UV presents all relevant data in the form of a calibration file, which should be saved and stored safely.

It is recommended to carry out 3 - 5 individual measurements under “Measurement” before the actual calibration in order to bring the sensor up to operating temperature.

If possible, carry out the zero point determination at an ambient temperature of 20 °C. The temperature of the ultrapure water should also be 20 °C.

During calibration, the base intensity I_0 is redetermined for both LEDs.

NOTICE

The values under “Base Intensity” must not fall below 13000 for both wavelengths.

The base intensity for the zero point is set to 26000 for both LEDs on delivery. The values under “Base Intensity” must not fall below 13000 for both wavelengths. This corresponds approximately to a light intensity of 50 % of the initial intensity. If the values for the “Calibrated Raw” are below this, the cleanliness of the optical windows and the ultrapure water should be checked first. If the values of the zero point measurement are repeatedly below 13000, the sensor should be sent to TriOS Mess- und Datentechnik GmbH for maintenance.

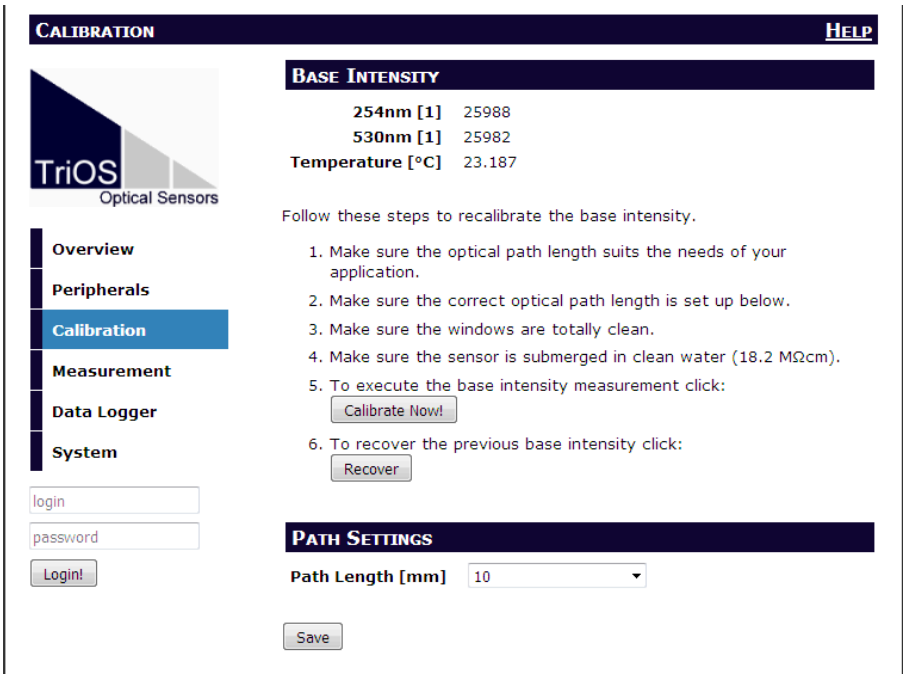

If a new customer calibration is carried out under “Calibration”, the path must be set correctly beforehand, otherwise the parameter will not be calculated correctly.

The zero point is determined by clicking the “Calibrate Now!” button and confirming the security prompt. It is necessary to immerse the cleaned sensor in ultrapure water for the process.

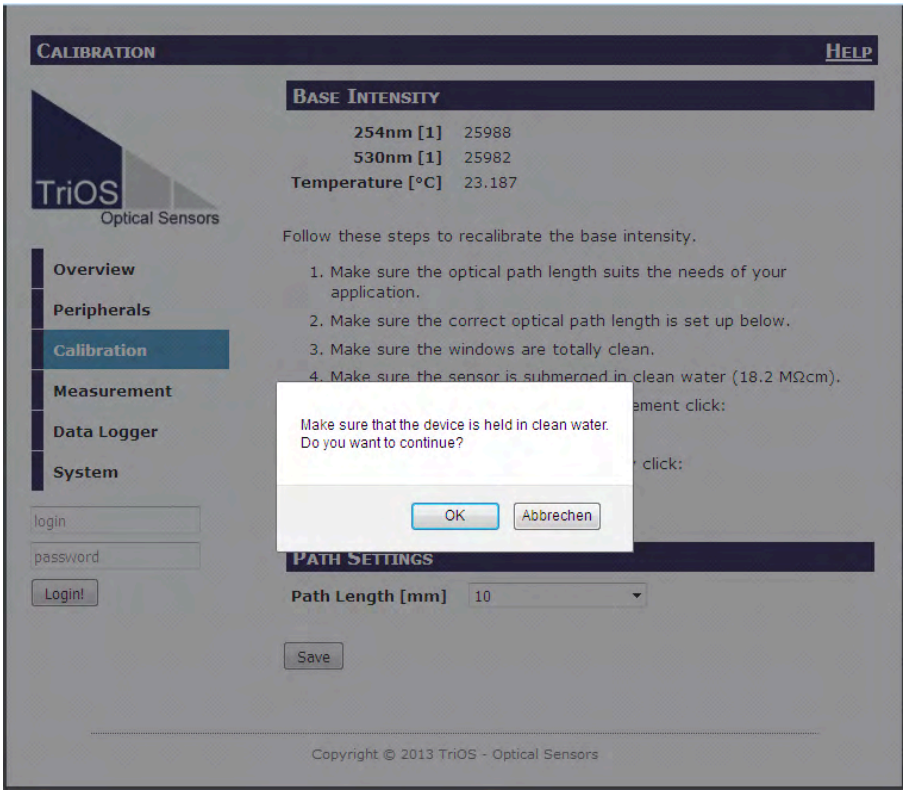

6.3.2 Restore point

The previous zero point measurement can be restored with “Recover” (page “Calibration”).

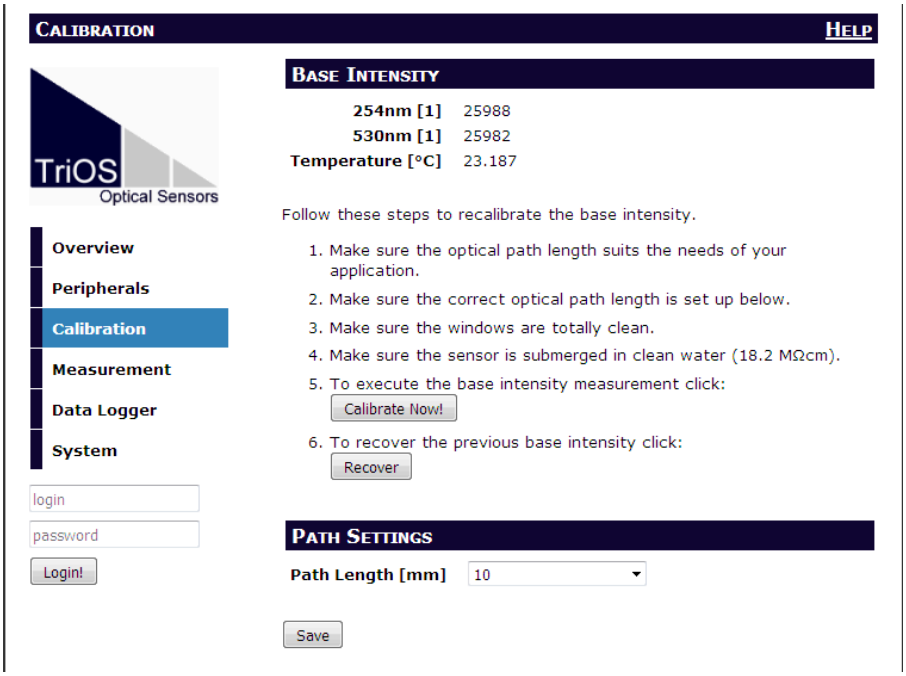

NOTICE

An incorrect zero point measurement can lead to completely incorrect measurement results!

The “Upload” function on the “System” page can be used to restore a previously downloaded calibration or to upload a calibration file created by the TriOS Mess- und Datentechnik GmbH service department to the sensor.

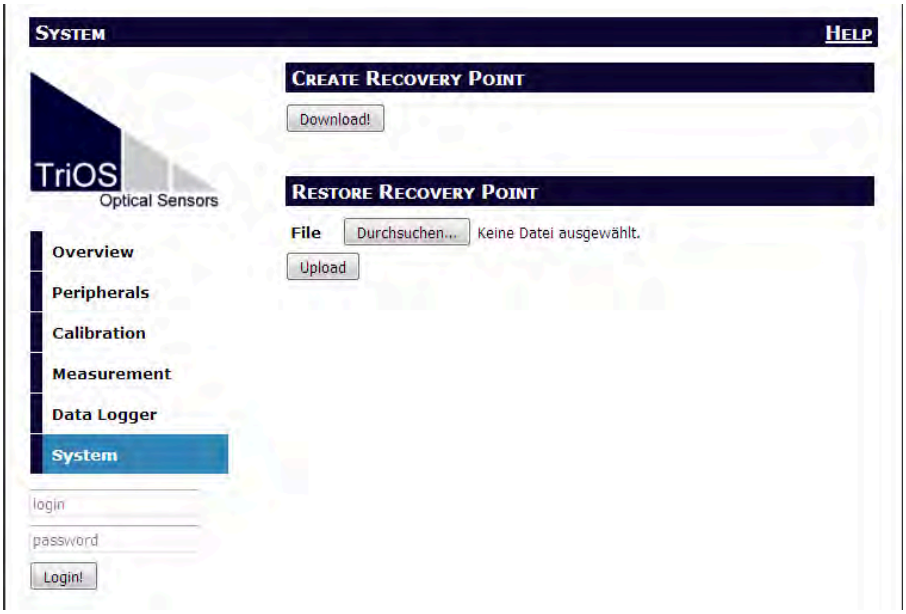

Enter the storage path to the corresponding calibration file in the “File” field or select it using the file dialog located behind the “Browse...” button. Then click on the “Upload” button to start the transfer. If the process has been completed successfully, this is confirmed by a green box with the inscription “Success”. If the process fails, a red box with an error message is displayed.

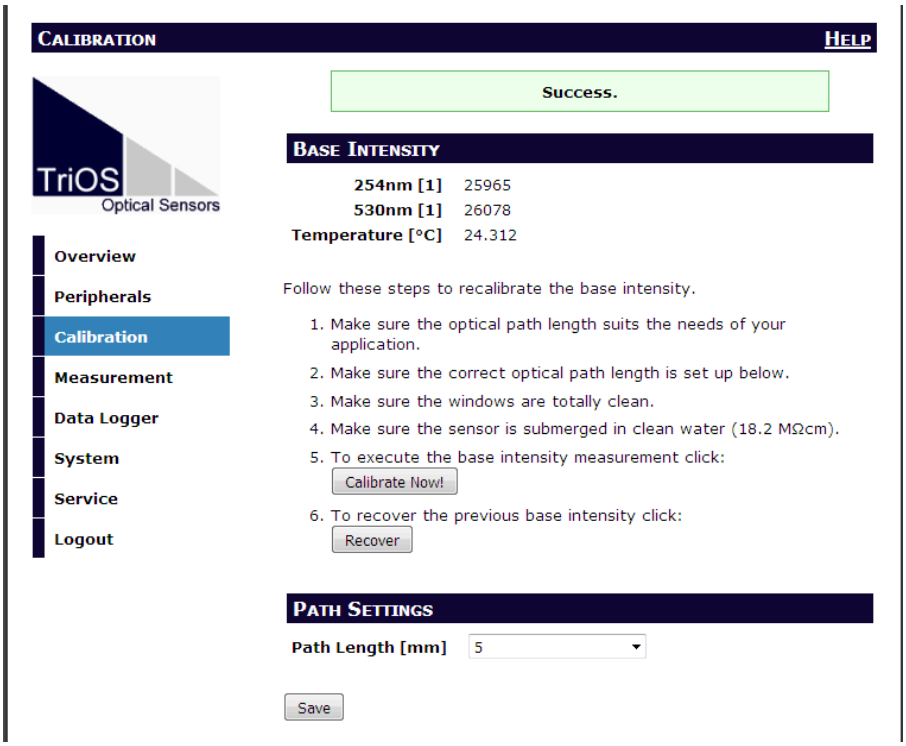

The following error messages and warnings are possible:

- **File not OK**. The calibration file could not be read correctly. Make sure that the correct file is selected and repeat the process. If the error persists, please contact technical support via support@trios.de.
- **Device type or serial number does not match**. The calibration file is not suitable for the currently connected sensor. Make sure that the correct calibration file is selected.

6.3.3 Measurement with a cuvette

As already mentioned in chapter 4.4, a measurement with a cuvette is also possible. In this case, it is absolutely necessary to determine a zero point. In any case, save the existing zero point so that the adjusted calibration can be used again in subsequent diving operations.

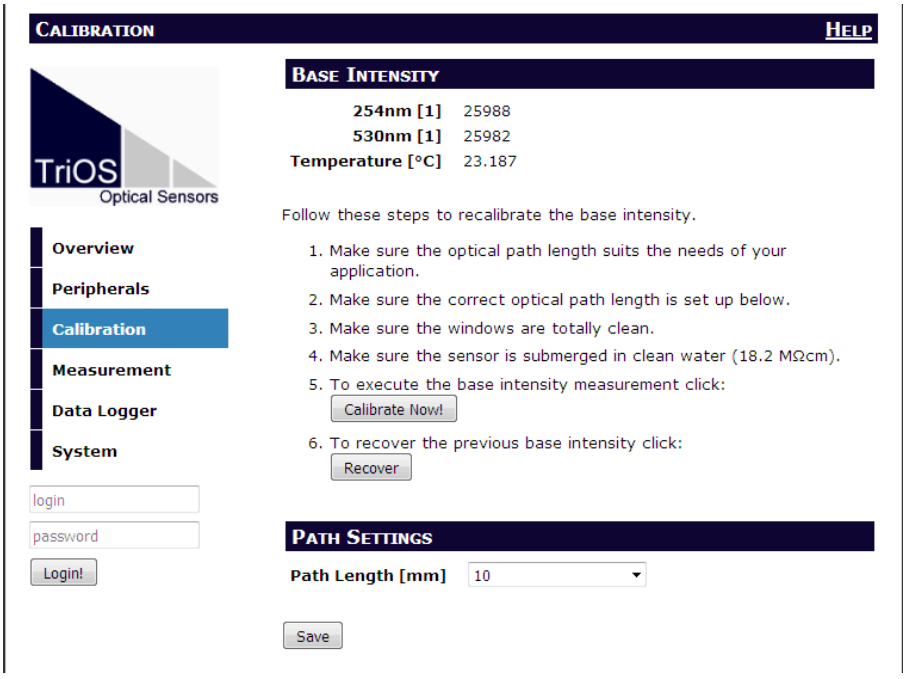

The path length is entered via the “Pathlength [mm]” combo box. Possible path lengths are 0.3, 1, 2, 5, 10, 50 and 100 mm.

For measurements with a cuvette, the length of the cuvette must be set as the path length.

Important: Once the path length has been selected, this setting must be saved by clicking on the “Save” button so that it is adopted for the following measurements.

6.3.4 Firmware update

LISA UV offers the option of updating the firmware, i.e. the operating system of the sensor with all functions and setting options, via the bootloader. The following illustration shows a view of the bootloader.

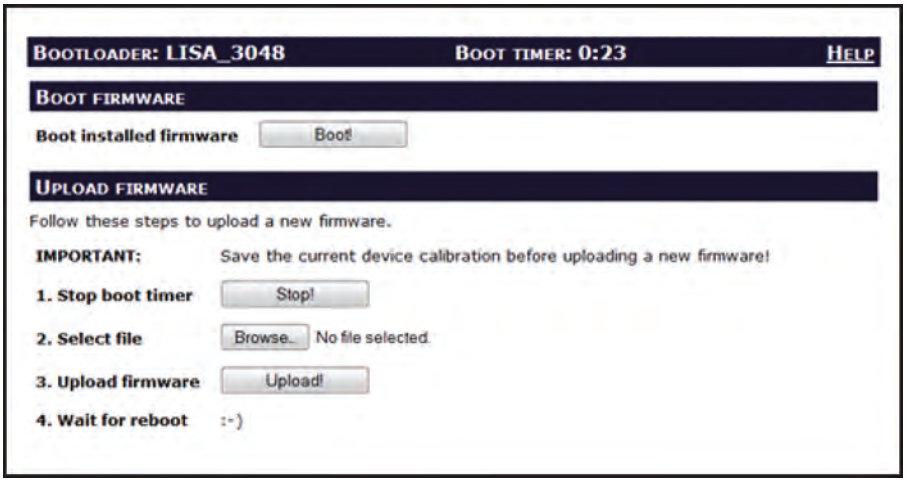

Proceed as follows to access the bootloader. First make sure that the Ethernet extension of your Ethernet-capable device is set as follows:

- IP: 169.254.77.2
- Subnetmask: 255.255.0.0
- No default gateway
- No DNS server

Then carry out the following steps:

1. Connect the sensor to the G2 InterfaceBox, do not switch on the power supply yet!
2. Connect the LAN cable to your Ethernet-capable device and the G2 InterfaceBox.
3. Now switch on the power supply to the G2 InterfaceBox.
4. Open the URL in the web browser of your device: http://lisa_3XXX/ (3XXX is the serial number) or http://169.254.77.1/. The bootloader is displayed as shown in the figure above.
5. Stop the “Boot timer”.
6. To install a firmware update, enter the path to the firmware file (usually named “LISA_YYYY.MM.DD.hex”) in the “File” field or select it using the “Browse...” button. Then click on the “Upload!” button to start the process.
7. Wait until the message “Success. Please wait....” appears.
8. Reset the Ethernet adapter to automatically obtain an IP address.
9. Call up the sensor again with http://lisa_3XXX/ or http://192.168.77.1/.
10. The usual overview page appears again.

Attention: There is only a limited period of 30 s available to access the bootloader. If this period is exceeded or the bootloader view does not appear, remove the power supply from the sensor and repeat the above procedure from step 4.

NOTICE

Do not switch off the sensor during the update process!

NOTICE

The loss of operating voltage during the update process can lead to total damage to the sensor.

If the update is successful, a green box with the inscription “Success.” is displayed.

If an error occurs during the update process, this is indicated by a red box with a corresponding error message.

Possible error messages are listed below:

- **“File not found”** No**firmware** was found in the internal cache. Try the update again. If the error persists, please contact the technical support of TriOS Mess- und Datentechnik GmbH via support@trios.de.
- **“File not OK”** An error occurred while transferring the firmware file. Make sure that the correct file is selected and try the update again. If the problem persists, please contact the technical support of TriOS Mess- und Datentechnik GmbH via support@trios.de.
- **“Internal writing error”** An error has occurred while writing the internal cache. Try the update again. If the error persists, please contact the technical support of TriOS Mess- und Datentechnik GmbH via support@trios.de.
- **“Firmware type does not match”** Make sure that the correct file is selected. Is the firmware file a LISA UV sensor firmware? Does the hardware variant of your sensor match the firmware file (analog or digital)?

To exit the bootloader without making any changes, first reset the Ethernet adapter to “Obtain IP address automatically” and then click on the “Boot!” button. After a few seconds, the overview page is displayed as usual and you can use the sensor.

6.4 Return shipment

Please note the procedure for your return.

If you are returning a sensor or device, please use the URL **trios.de/rma** to go to our **online form**, which you can use to register your return shipment to TriOS **technical support**.

To ensure a smooth return shipment process, please complete the online form in full. Please note the mandatory fields, otherwise the form cannot be sent. The system **automatically assigns an RMA number**.

After submitting your entries, you will immediately receive an e-mail with the data you have entered, a link to **free DHL shipping** and a label with the **RMA number of your case**.

Please make sure you stick this label **clearly visible on the** outside of **your return package** so that the package can be assigned more quickly.

Please note! Returns without an RMA number cannot be accepted and processed!

Please note that the sensor or the device must be cleaned and disinfected before shipping.

Use the original packaging to ensure that the goods are sent undamaged. If this is not available, ensure that safe transportation is guaranteed and that the sensors are secured with sufficient packing material.

We will contact you as soon as possible after receiving the return shipment.

7 Technical data

7.1 Technical specifications

Measurement technology	**Light source**	2 LEDs (254 nm, 530 nm)
	Detector	Photodiode
Measuring principle		Attenuation, transmission
Optical path		0.3 mm, 1 mm, 2 mm, 5 mm, 10 mm, 20 mm, 50 mm, 100 mm
Parameters		SAC_{254}, COD_{eq}, BOD eq, TOC_{eq}, UVT, $Turb_{530}$
Measuring range		See table of parameters
Repeatability		0.2 %
Turbidity compensation		at 530 nm
Data logger		~ 2 MB
Response time T100		4 s
Measuring interval		≥ 2 s
Housing material		Stainless steel (1.4571/1.4404) or titanium (3.7035)
Dimensions (L x Ø)		300 mm x 48 mm (with 10 mm path) / ~ 11.8" x 1.9" (with 10 mm path)
Weight	**VA**	~ 2.3 kg (with 10 mm path) / ~ 5.1 lbs (with 10 mm path)
	Ti	~ 2.1 kg (with 10 mm path) / ~ 4.6 lbs (with 10 mm path)
Interface	**digital**	Ethernet (TCP/IP)
		RS-232 or RS-485 (Modbus RTU)
	analog	4 .. 20 mA, max. load: 500 Ohm
Power consumption		≤ 1 W
Power supply		12 – 24 VDC (± 10 %)
Maintenance effort		≤ 0.5 h/month (typical)
Calibration/maintenance interval		24 months
System compatibility		Modbus RTU or: Analog output (4 .. 20 mA)
Warranty		1 year (EU & USA: 2 years)

INSTALLATION

Max. Pressure	**with SubConn**	30 bar	~ 435 psi
	with fixed cable	3 bar	~ 43.5 psi
	in flow unit	1 bar, 2...4 L/min	~ 14.5 psi, 2 to 4 L/min
Degree of protection		IP68	

Sample temperature	0...+55 °C* +2...+40 °C for specified measurement accuracy	~ +32 to +131 °F* ~ +36 to +104 °F
Ambient temperature	0...+55 °C +2...+40 °C for specified measurement accuracy	~ +32 to +131 °F ~ +36 to +104 °F
Storage temperature	-20...+80 °C	~ -4 to +176 °F
Inflow velocity	0.1...10 m/s	~ 0.33 to 33 fps

*No ice crystals in the sample water

7.2 Measurement ranges and detection limits

The following table provides an overview of the measurement ranges and detection limits* of the various parameters depending on the path length:

Parameter	Unit	Factor	Path length and measurement range *			
			0.3 mm	1 mm	2 mm	5 mm
SAC_{254}	1/m		17...4900	5...1,500	2.5...750	1...300
COD_{eq} **	mg/L	1.46	26...7,300	8...2,200	4...1,100	1.5...440
BOD_{eq} **	mg/L	0.48	8.5...2,300	2.5...700	1.25...350	0.5...140
TOC_{eq} **	mg/L	0.584	10...2,900	3...880	1.5...440	0.6...175
$Turb_{530}$	FAU ***	3.054 / 0.096	70...32,000	20...4,000	10...1,400	4...420
TSS_{eq} ****	mg/L	3.9	65...6,500	20...2,000	10...1,000	4...400
$AbsAU_{254}$	AU *****		0.005...1.5	0.005...1.5	0.005...1.5	0.005...1.5
$AbsAU_{530}$	AU *****		0.005...0.5	0.005...0.5	0.005...0.5	0.005...0.5
Abs_{254}	1/m		17...4900	5...1,500	2.5...750	1...300
Abs_{530}	1/m		17...1,600	5...500	2.5...250	1...100
$Trans_{254}$	%		3...98.8	3...98.8	3...98.8	3...98.8
$Trans_{530}$	%		3...98.8	3...98.8	3...98.8	3...98.8

Parameter	Unit	Factor	Path length and measurement range *			
			10 mm	20 mm	50 mm	100 mm
SAC_{254}	1/m		0.5...150	0.25...75	0.1...30	0.05...15
COD_{eq} **	mg/L	1.46	0.8...220	0.4...110	0.15...45	0.08...22
BOD_{eq} **	mg/L	0.48	0.25...70	0.125...35	0.05...15	0.025...7
TOC_{eq} **	mg/L	0.584	0.3...90	0.15...45	0.06...20	0.03...9
$Turb_{530}$	FAU ***	3.2054 / 0.096	2...200	0.8...90	0.4...40	0.2...16
TSS_{eq} ****	mg/L	3.9	2...200	1...100	0.4...40	0.2...20
$AbsAU_{254}$	AU *****		0.005...1.5	0.005...1.5	0.005...1.5	0.005...1.5
$AbsAU_{530}$	AU *****		0.005...0.5	0.005...0.5	0.005...0.5	0.005...0.5
Abs_{254}	1/m		0.5...150	0.25...75	0.1...30	0.05...15
Abs_{530}	1/m		0.5...50	0.25...25	0.1...10	0.05...5
$Trans_{254}$	%		3...98.8	3...98.8	3...98.8	3...98.8
$Trans_{530}$	%		3...98.8	3...98.8	3...98.8	3...98.8

* Under laboratory conditions; ** Relative to KHP (100 mg COD standard solution corresponds to 85 mg/L KHP); *** Formazin attenuation unit; **** Relative to SiO2; ***** Unit of absorption measure

NOTICE

The transmission at 530 nm must not fall below 33 %, otherwise the turbidity content in the medium is too high and the path must be shortened.

7.3 Outer dimensions

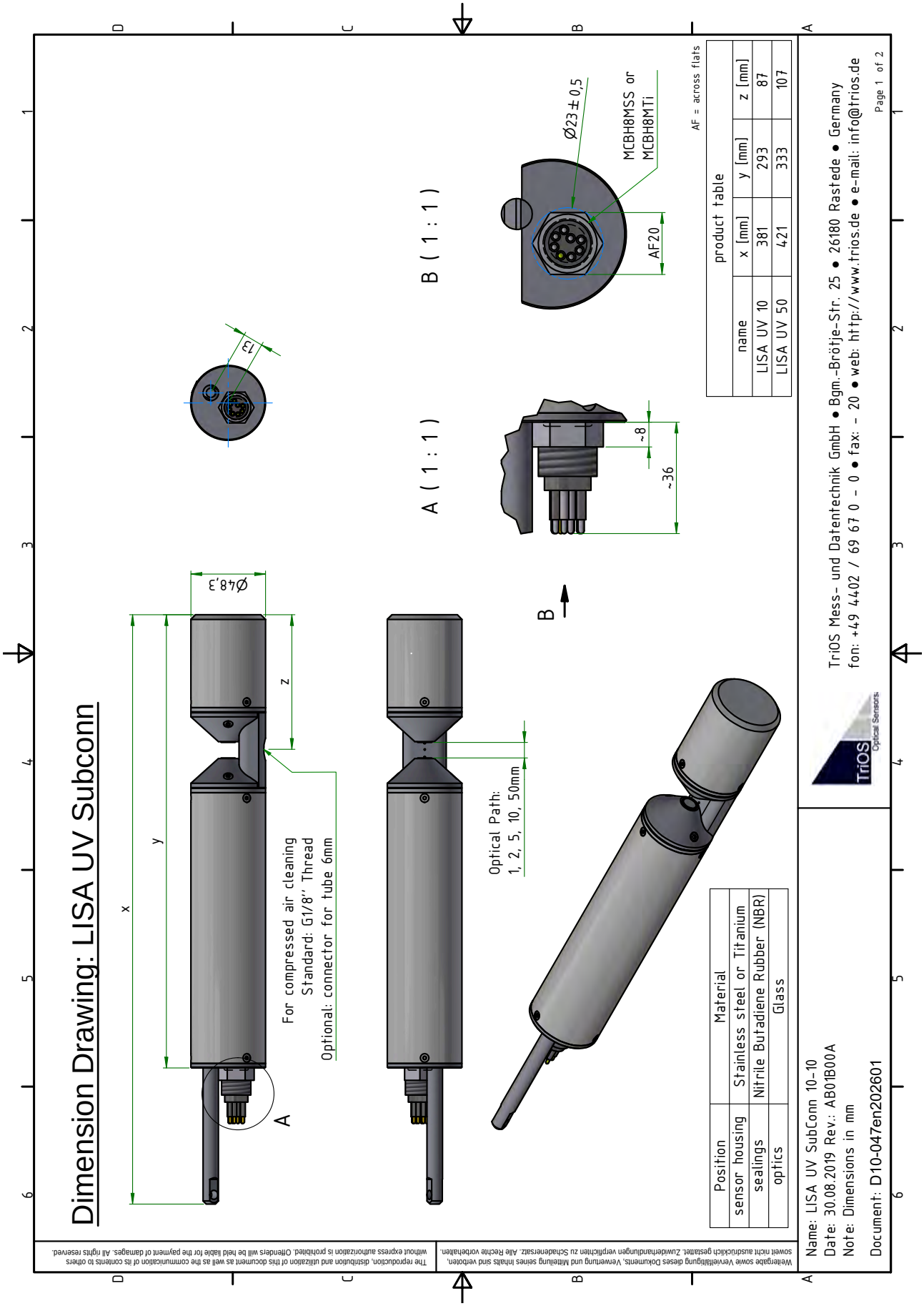

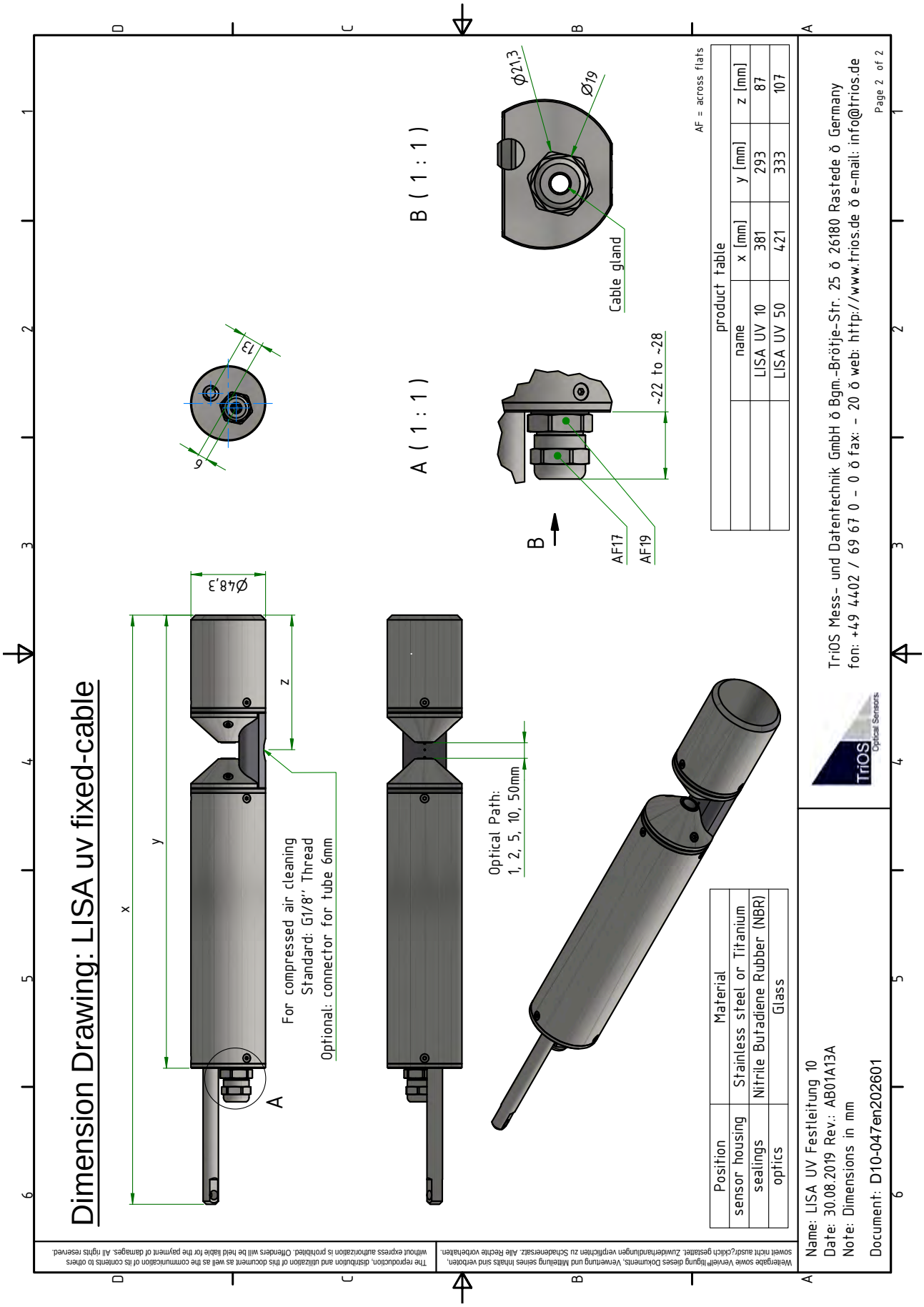
Dimension Drawing: LISA uv fixed-cable
x
y
z
Ø48,3
A
For compressed air cleaning
Standard: G1/8'' Thread
Optional: connector for tube 6mm
Optical Path:
1, 2, 5, 10, 50mm
A (1 : 1)
B (1 : 1)
13
6
Ø21,3
Ø19
Cable gland
~22 to ~28
B
AF17
AF19
AF = across flats
product table
name | x [mm] | y [mm] | z [mm]
LISA UV 10 | 381 | 293 | 87
LISA UV 50 | 421 | 333 | 107
Position | Material
sensor housing | Stainless steel or Titanium
sealings | Nitrile Butadiene Rubber (NBR)
optics | Glass
TriOS Mess- und Datentechnik GmbH ŏ Bgm.-Brötje-Str. 25 ŏ 26180 Rastede ŏ Germany
fon: +49 4402 / 69 67 0 - 0 ŏ fax: - 20 ŏ web: http://www.trios.de ŏ e-mail: info@trios.de
Page 2 of 2
TriOS Optical Sensors
Name: LISA UV Festleitung 10
Date: 30.08.2019 Rev.: AB01A13A
Note: Dimensions in mm
Document: D10-047en202601
Weitergabe sowie Vervielfältigung dieses Dokuments, Verwertung und Mitteilung seines Inhalts sind verboten, soweit nicht ausdrücklich gestattet. Zuwiderhandlungen verpflichten zu Schadenersatz. Alle Rechte vorbehalten.
The reproduction, distribution and utilization of this document as well as the communication of its contents to others without express authorization is prohibited. Offenders will be held liable for the payment of damages. All rights reserved.

8 Accessories

8.1 Measuring accessories

8.1.1 VALtub

VALtub is used for the validation of TriOS photometers. The sample can be filled conveniently and leak-proof and analyzed without immersing the sensor.
The VALtub is also used to check and recalculate the zero values. Due to the adapted shape, only small amounts of water are required to carry out a measurement.
It is suitable for all TriOS photometers.

8.1.2 Cuvette holder

8.1.2 Cuvette holder

Cuvette holder for standard 5 mm cuvettes. Particularly suitable for laboratory measurements and very smallest sample quantities.

8.2 Controller

8.2.1 TriBox3

Digital 4-channel display and control unit with integrated solenoid valve for compressed air control

TriBox3 is a measuring and control system for all TriOS sensors. The device offers 4 sensor channels with selectable RS-232 or RS-485 function. In addition to Modbus RTU, various other protocols are available.
A built-in valve allows the use of compressed-air cleaning for the sensors. The TriBox3 also offers various interfaces, including an IEEE 802.3 Ethernet interface, a USB port and 6 analog outputs (4 .. 20 mA).
An integrated relay can be used to trigger alarms or control external devices. Low power consumption, a robust aluminum housing and a range of interfaces makes it suitable for all applications in environmental monitoring, drinking water, wastewater treatment plants and many other areas.

8.2.2 TriBox mini

Digital 2-channel controller

Die TriBox mini is an controller with two digital sensor inputs and two 4 .. 20 mA outputs and represent a cost-effective alternative to analog measuring points.
The TriBox mini is compatible with all TriOS sensors.
All stored measured values and diagnostic data can be read out via an integrated web browser.

9 Warranty

The warranty period for our devices within the EU and the USA is 2 years from the date of invoice. Outside the EU it is 1 year. Excluded from the warranty are all normal consumables
(depending on the product, e.g. light sources or windows).

The warranty is subject to the following conditions:

- The device and all accessories must be installed as described in the relevant manual and operated in accordance with the specifications.
- Damage caused by contact with aggressive and material-damaging substances, liquids or gases, as well as transport damage, are not covered by the warranty.
- Damage caused by improper handling and use of the device is not covered by the warranty.
- Damage caused by modification or unprofessional attachment of accessories by the customer is not covered by the warranty.

NOTICE

Opening the device will void the warranty!

10 Technical support

If you have a problem with a TriOS sensor / a TriOS device, please contact TriOS technical support.

We recommend sending in sensors every 2 years for maintenance and calibration. When returning devices, please be sure to follow the procedure described in Chapter 6.

Contact technical support:

E-mail: support@trios.de
Phone: +49 (0) 4402 69670 - 0
Fax: +49 (0) 4402 69670 - 20

To enable us to help you quickly, please send us the sensor ID number (serial number with 8 digits, consisting of letters and numbers, e.g. 6700003F) by e-mail.

11 Contact us

We are constantly working on improving our devices. Please visit our website for the latest news.

If you have found a fault in one of our devices or programs or would like additional functions, please contact us:

Technical Support:	support@trios.de
General questions/sales:	sales@trios.de
Website:	www.trios.de

TriOS Mess- und Datentechnik GmbH
Bürgermeister-Brötje-Str. 25
26180 Rastede
Rastede, Germany

Telephone	+49 (0) 4402 69670 - 0
Fax	+49 (0) 4402 69670 - 20

12 Keyword index

A

absorption coefficient ... 10
Accessories ... 55
Application ... 26

B

Biological safety ... 5
Browser ... 11
Bypass installation ... 28

C

CE declaration of conformity ... 64
Certificates and approvals ... 7
cleaning ... 38
Cleaning the measuring window ... 39
Compressed air cleaning ... 27
Contact us ... 59
copyright ... 4
Customer calibration ... 34
cuvette holder ... 32

D

Data logger ... 16
detection limits ... 52
dimensions ... 53
disposal ... 7
Diving operation ... 26

E

Electrical installation ... 18
Electromagnetic waves ... 5
Ethernet connection ... 23

F

factor ... 34
FAQ - Frequently asked questions ... 62
Firmware update ... 47
Float ... 28
FlowCell ... 29

G

G2 InterfaceBox ... 23

H

Health and safety instructions ... 4
Housing cleaning ... 38
hydraulic clamps ... 26

I

Intended use ... 6
interfaces ... 19

M

M12 industrial plug 19
Maintenance 40
Manufacturer calibration 33
Measurement principle and structure 9
Measurement properties 37
Measurement ranges 52
Measurement with a cuvette 46
Modbus RTU 65

N

Nano coating 27
Network 23
Normal operation 26

O

offset 33, 34
operating requirements 6

P

Parameters 11
Pipe installation 30
Product identification 8

R

Reagents 5
Restore point 45
Return shipment 48

S

scaling factor 33
Scope of delivery 9
Spectral absorption coefficient SAC 10
SubConn connector 8pin 18

T

Technical specifications 50
Technical support 58, 59
transmission 10, 42
Troubleshooting 43
type plate 8

W

Warning notices 5
Warranty 57
web interface 12

Z

zero point check 40

13 Appendix

13.1 FAQ - Frequently asked questions

1. What is the cable configuration of the M12 connector for the analog version of the LISA UV?

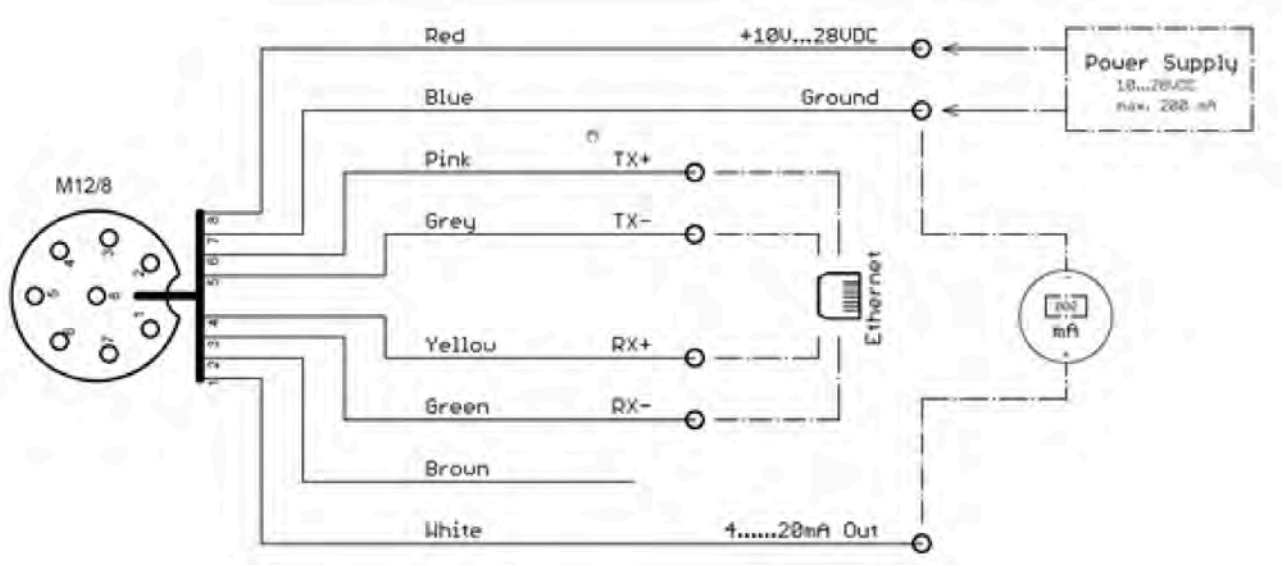

2. What is the cable configuration of the M12 connector for the digital version of the LISA UV?

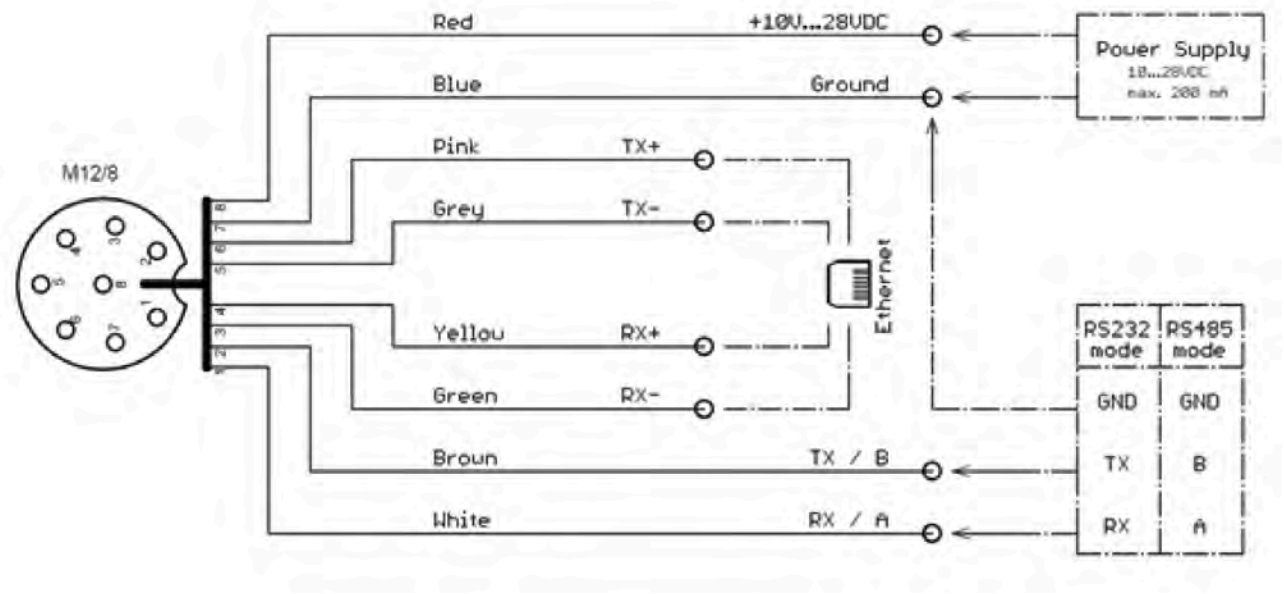

3. When do I need the G2 InterfaceBox?

LISA UV is an innovative measuring instrument that does not require any additional hardware.

The settings of the LISA sensor are changed via the web interface. To access the web interface you need the G2 InterfaceBox and an Ethernet-capable device with a web browser, such as a notebook.

4. Which wavelengths are used for the measurement?

The LISA sensor can measure at wavelengths of 254 nm and 530 nm. The measurement at 530 nm is only intended as a turbidity correction for the $_{SAC254}$. For the measurement of UV transmission, measurements are only taken at 254 nm. The wavelengths are fixed and cannot be changed.

5. Why do the optical windows have to be cleaned carefully?

The windows of an optical measuring device must always guarantee maximum transmission. Scratched or cracked windows can significantly impair the measurement and thus falsify the measurement result.

6. The sensor only outputs NAN values or “???”. What does this mean?

Presumably the measured value cannot be calculated, see chapter 5.3 Measurement properties

13.2 CE declaration of conformity

Hersteller/Manufacturer/Fabricant:	TriOS Mess- und Datentechnik GmbH Bürgermeister-Brötje-Str. 25 D- 26180 Rastede

Konformitätserklärung
Declaration of Conformity
Déclaration de Conformité

Die TriOS GmbH bescheinigt die Konformität für das Produkt
The TriOS GmbH herewith declares conformity of the product
TriOS GmbH déclare la conformité du produit

Bezeichnung Product name Designation	**LISA UV**
Typ / Type / Type	Art.Nr. 14Sxxx0x0 digital Art.Nr. 14Sxxx1x0 analog
Mit den folgenden Bestimmungen With applicable regulations Avec les directives suivantes	2014/30/EU EMV-Richtlinie 2011/65/EU RoHS-Richtlinie + (EU) 2015/863 + (EU) 2017/2102
Angewendete harmonisierte Normen Harmonized standards applied Normes harmonisées utilisées	EN IEC 61326-1:2021 EN 61010-1:2010 +A1:2019 +A1:2019/AC:2019 EN IEC 63000:2018
Datum / Date / Date	Unterschrift / Signature / Signature
21.05.2024	R. Heuermann

D05-047yy202405

Seite 1 von 1

13.3 Modbus RTU

Firmware version

This Modbus protocol refers to firmware version 1.8.3 and higher

Serial interface

On delivery, the LISA UV sensor is configured to RS-485 with the following settings:

- Baud rate: 9600 bps
- Data bits: 8
- Stop bits: 1
- Parity: none

Data types

Data type name	register	format
Bool	1	false: 0x0000, true: 0xFF00
Uint8	1	8-bit positive integer. Values: 0x0000 - 0x00FF
Uint16	1	16-bit positive integer. Values: 0x0000 - 0xFFFF
Uint32	2	32-bit positive integer. Values: 0x00000000 - 0xFFFFFFFFFF
Float	2	IEEE 754 32-bit floating point number
Char[n]	$[\frac{n}{2}]$	ASCII character string with n characters

Functions

LISA UV supports the following Modbus functions:

Name	Code	Description / Use
Read multiple registers	0x03	Read serial number, firmware version, configuration, calibration and measurement data
Write multiple registers	0x10	Write configuration data
Write single register	0x06	Triggering a measurement or self-calibration process
Report slave ID	0x11	Read serial number and firmware version

Default slave address

On delivery, the LISA UV sensor is set to slave address 2 (0x02).

Read / Write multiple registers (0x03 / 0x10)

Access authorizations

The “R/W” column describes the access restrictions for registers. An “R” means that it can be read (0x03), a “W” means that it can be written (0x10).

The following table describes the Modbus register assignment *:

Designation	R/W	Address	Data type	Data type Description
Modbus slave ID	R/W	0	Uint16	The Modbus slave address of the sensor. Permitted IDs: 1...247
New data available	R/W	1	Bool	Set to “true” if a new measurement has been completed and new measurement data is available. Must be manually reset to “false”; is not automatically reset after reading.
LISA serial number	R	10	Char[10]	The device name, followed by the serial number of the sensor, separated by an underscore, e.g. “LISA_3044”
Lamp serial number	R	20	Char[44]	Contains three strings separated by \0: - Lamp serial number with the prefix “Lamp_”, e.g. “Lamp_1234” - Name of the lamp type - Number of flashes that the lamp has generated during its service life
Self-trigger	R/W	100	Bool	Activate or deactivate automatic mode. For an external trigger: Deactivate automatic mode. Notice: When used with a control unit, it is recommended to deactivate automatic mode.
Averaging	R/W	101	Uint16	If a value other than 1 is set, several individual measurements are carried out for each measurement request and then averaged.
Interval	R/W	102	Uint32	The interval in [s] for self-triggered measurements. Value range: 1 s - 86,400 s. Notice: When used with a control unit, it is recommended to deactivate automatic mode.
Path length	R/W	122	Float	Optical path length in [mm]. Possible values: 0.3, 1, 2, 5, 10, 20, 50, 100
Custom name #1	R/W	132	Char[16]	Name of the first customer-calibrated parameter
Custom unit #1	R/W	140	Char[8]	Unit of the first customer-calibrated parameter
Custom input #1	R/W	144	Uint32	Input of the first customer-calibrated parameter Values: 0x00: SAC_{254} 0x01: Abs_{254} 0x02: Abs_{530}
Custom offset #1	R/W	146	Float	Offset of the first customer-calibrated parameter
Custom scaling #1	R/W	148	Float	Slope of the first customer-calibrated parameter

Designation	R/W	Address	Data type	Data type Description
Custom name #2	R/W	150	Char[16]	Name of the second customer-calibrated parameter
Custom unit #2	R/W	158	Char[8]	Unit of the second customer-calibrated parameter
Custom input #2	R/W	162	Uint32	Input of the second customer-calibrated parameter Values: 0x00: SAC_{254} 0x01: Abs_{254} 0x02: Abs_{530}
Custom offset #2	R/W	164	Float	Offset of the second customer-calibrated parameter
Custom scaling #2	R/W	166	Float	Slope of the second customer-calibrated parameter
Custom name #3	R/W	168	Char[16]	Name of the third customer-calibrated parameter
Custom unit #3	R/W	176	Char[8]	Unit of the third customer-calibrated parameter
Custom input #3	R/W	180	Uint32	Input of the third customer-calibrated parameter Values: 0x00: SAC_{254} 0x01: Abs_{254} 0x02: Abs_{530}
Custom offset #3	R/W	182	Float	Offset of the third customer-calibrated parameter
Custom scaling #3	R/W	184	Float	Slope of the third customer-calibrated parameter
Shot counter	R	200	Uint32	The number of measurements that the lamp has recorded in its lifetime to date

Designation	R/W	Address	Data type	Data type Description
SAC_{254}	R	1000	Float	Spectral absorption coefficient at 254 nm in [m-1]
COD_{eq}	R	1002	Float	Equivalent to the chemical oxygen demand in [mg/L]
BOD_{eq}	R	1004	Float	Equivalent to the biological oxygen demand in [mg/L]
TOC_{eq}	R	1006	Float	Total organic carbon in [mg/L]
$Trans_{254}$	R	1008	Float	Transmission of the UV LED in [%]
$Trans_{530}$	R	1010	Float	Transmission of the reference LED in [%]
Turbidity	R	1032	Float	Turbidity in [FAU]
Abs_{254}	R	1034	Float	Absorption at 254 nm in [m-1]
Abs_{530}	R	1036	float	Absorption at 530 nm in [m-1]

Designation	R/W	Address	Data type	Data type Description
SQI	R	1038	Float	Spectral quality index [1]
$AbsAU_{254}$	R	1040	Float	Absorption at 254 nm in [AU]
$AbsAU_{530}$	R	1042	Float	Absorption at 530 nm in [AU]
Custom #1	R	1044	Float	Measured value of the first customer-calibrated parameter
Custom #2	R	1046	Float	Measured value of the second customer-calibrated parameter
Custom #3	R	1048	Float	Measured value of the third customer-calibrated parameter
UVT_{254n}	R	1050	Float	UV transmission at 254 nm, normalized to 1 cm, in [%]

* **Notice:** The configuration registers should be written to as rarely as possible, especially not in every measurement cycle, as otherwise the flash memory may be damaged.

Write single register (0x06)

Writing a value other than false (0x000) to a coil/register of the following address triggers the following associated action:

Designation	Address	Address Description
Start measurement	1	Triggers a single measurement, unless the sensor is currently busy with another measurement. In this case, the request is ignored. Duration ~2 s.

Report slave ID (0x11)

Returns the sensor designation, followed by the serial number, followed by the firmware version, each as a zero-terminated ASCII character string.

Example:

L	I	S	A	0x00	3	0	4	4	0X00	1	.	8	0x00

TriOS Mess- und Datentechnik GmbH
Bgm.-Brötje-Str. 25 · 26180 Rastede · Deutschland
Tel +49 (0)4402 69670-0
Fax +49 (0)4402 69670-20
info@trios.de
www.trios.de