Wiper W55 V2

Manual

Table of contents

1 General information **3**
1.1 General information 3
1.2 Health and safety instructions 3
1.3 Warning notices 4
1.4 User and operating requirements 4
1.5 Intended use 5
1.6 Disposal instructions 5
1.7 Certificates and approvals 5

2 Introduction **6**
2.1 Introduction 6
2.2 Product identification 6
2.3 Scope of delivery 7

3 Commissioning **8**
3.1 Inserting and changing the wiper blade 8
3.2 Replacing the housing seal (O-ring) and the axis 9
3.3 Installation of the wiper on the sensor 10
3.4 Connection overview 10

4 Application **12**
4.1 Connection to the TriBox3 12
4.2 Connection to the TriBox mini 14

5 Calibration **16**
5.1 Service mode 16

6 Malfunction and maintenance **17**
6.1 Blockage detection 17
6.2 Return shipment 17

7 Technical data **18**
7.1 Technical specifications 18
7.2 Outer dimensions 19

8 Accessories **20**
8.1 Wiper protective cage 20
8.2 Compressed air purge 22

9 Warranty **23**

10 Technical support **24**

11 Contact us **25**

12 Index **26**

13 Appendix **27**
13.1 CE declaration of conformity 27

1 General information

1.1 General information

Welcome to TriOS.

We are pleased that you have chosen the TriOS Wiper W55 V2.

The TriOS Wiper W55 V2 offers an additional cleaning option for all TriOS photometers with path lengths from 1 mm up to 10 mm. The wiper housing can be mounted on the sensor in just a few steps and offers reliable cleaning of the measurement windows. The new magnetic axis lock allows quick and easy wiper blade replacement without the need for tools.

The new version of the wiper now features blockage detection and removal and a service mode that increases the service life of the wiper through regular use. The accessory can also be used in seawater up to a depth of 10 meters.

In this manual you will find all the information you need for commissioning the Wiper W55 V2. Technical specifications and dimensions can be found in chapter 7.

Please note that the user is responsible for complying with regional and national regulations for the installation of electronic devices. Any damage caused by incorrect use or unprofessional installation is not covered by the warranty.

All sensors and accessories supplied by TriOS Mess- und Datentechnik GmbH must be installed and operated in accordance with TriOS Mess- und Datentechnik GmbH specifications. All parts have been designed and tested according to international standards for electronic instruments. The device complies with international standards for electromagnetic compatibility. Please use only original TriOS accessories and cables to ensure smooth and professional use of the devices.

Read this manual carefully before using the device and keep it for future reference. Before using the sensor, make sure that you have read and understood the safety precautions described below. Always ensure that the sensor is operated correctly. The safety precautions described on the following pages are intended to ensure problem-free and correct operation of the device and the associated accessories and to prevent you, other persons or devices from being harmed.

NOTICE

If translations differ from the original German text, the German version is binding.

Copyright notice

All contents of this manual, in particular texts, photographs and graphics, are protected by copyright. Unless expressly indicated otherwise, the copyright lies with TriOS Mess- und Datentechnik GmbH. Persons who violate the copyright are liable to prosecution in accordance with § 106 ff of the Copyright Act and will also be warned and liable to pay compensation.

1.2 Health and safety instructions

This manual contains important information on health and safety regulations. This information is marked in accordance with the international specifications of ANSI Z535.6 (“Product safety information in product manuals, instructions and other collateral materials”) and must be followed. The following categories are distinguished:

⚠ DANGER

Danger / Will cause serious injury or death

⚠ WARNING

Warnings / May cause serious injury or death

⚠ CAUTION

Caution / May cause moderate injury

NOTICE

May lead to material damage

Tip / Useful information

Electromagnetic waves

Devices that emit strong electromagnetic waves can influence the measurement data or cause the sensor to malfunction. Avoid operating the following devices in the same room as the TriOS sensor: cell phones, cordless phones, transceivers or other electrical devices that generate electromagnetic waves.

1.3 Warning notices

General notices:

- The material resistance of the accessories used should be checked for each application.
- Do not cut, damage or modify the cables. Ensure that there are no heavy objects on the cables and that the cables do not kink. Ensure that the cables do not run close to hot surfaces.
- If a cable is damaged, it must be replaced with an original part by TriOS Mess- und Datentechnik GmbH customer support.
- Never attempt to disassemble or modify any part of the device unless expressly described in this manual. Inspections, modifications and repairs may only be carried out by the device dealer or by qualified specialists authorized by TriOS.
- Devices from TriOS Mess- und Datentechnik GmbH comply with the highest safety standards. Repairs to the devices (which include the replacement of the connection cable) must be carried out by TriOS Mess- und Datentechnik GmbH or an authorized TriOS workshop. Incorrect, improper repairs can lead to accidents and injuries.

NOTICE

TriOS does not guarantee the plausibility of the measured values. The user is always responsible for monitoring and interpreting the measured values.

1.4 User and operating requirements

The W55 V2 wiper was developed as an accessory for TriOS photometers and therefore for use in industry and science. The target group for operating the W55 V2 wiper is technically experienced specialist personnel in companies, sewage treatment plants, waterworks and institutes.

The application often requires the handling of hazardous substances. We assume that the operating personnel are familiar with the handling of hazardous substances due to their professional training and experience. In particular, the operating personnel must be able to correctly understand and implement the safety markings and safety instructions on the packaging and in the package inserts of the test kits.

1.5 Intended use

The wiper is intended exclusively as a cleaning system for operation on a TriBox3 or TriBox mini in conjunction with TriOS sensors. Please observe the technical data of the accessories. Any other use is considered improper.

According to current scientific knowledge, the device is safe to use if it is handled in accordance with the instructions in this operating manual.

NOTICE

Damage caused by improper use is excluded from the warranty.

⚠ DANGER

This product is not suitable for use in potentially explosive atmospheres.

1.6 Disposal instructions

At the end of its service life or useful life, the device and its accessories can be returned to the manufacturer (see address below) for disposal in an environmentally friendly manner. Proof of prior professional decontamination must be provided in the form of a certificate. Please contact us before returning the device for further details.

Address of the manufacturer:

TriOS Mess- und Datentechnik GmbH
Bürgermeister-Brötje-Str. 25
26180 Rastede
Rastede, Germany
Phone: +49 (0) 4402 69670 - 0
Fax: +49 (0) 4402 69670 - 20

1.7 Certificates and approvals

The product meets all requirements of the harmonized European standards. It therefore fulfills the legal requirements of the EU directives. TriOS Mess- und Datentechnik GmbH confirms the successful testing of the product by affixing the CE mark (see appendix).

2 Introduction

2.1 Introduction

The Wiper W55 V2 from TriOS is an additional cleaning option for all TriOS photometers with path lengths from 1 mm to 10 mm. It is easy to install and provides reliable cleaning of the measurement windows, ensuring consistently high measurement accuracy of the sensor. The wiper blades can be changed quickly and without tools.

Advantages:

- Avoidance of manual cleaning and maintenance work
- Extends the service life of sensors
- Efficient and environmentally friendly cleaning without chemicals

Areas of application:

- Use in bodies of water, sewage treatment plants, industrial process monitoring
- Marine and environmental research

The following chapters explain the correct operation of the wiper with all its functions and setting options.

2.2 Product identification

All TriOS Mess- und Datentechnik GmbH products are provided with a product label that clearly shows the product designation.

There is also a type plate on the device with the following information, which you can use to clearly identify the product:

Wiper W55 V2 type plate

The nameplate also contains the product barcode, the TriOS Optical Sensors logo and the CE quality mark.

Please note that the specifications given here are for illustrative purposes only and may vary depending on the product version.

2.3 Scope of delivery

The delivery includes the following components:

02A100008 **Wiper W55 V2**

- 1 x wiper
- 1 x M8 open end cable
- 1 x adjusting screw with O-ring
- 1 x Compressed air fitting incl. sealing plug
- 1 x magnet

02A100118 **Set with wiper blades for 1 mm path**
02A100218 **Set with wiper blades for 2 mm path**
02A100518 **Set with wiper blades for 5 mm path**
02A100618 **Set with wiper blades for 10 mm path**

- 5 x wiper blades 1,2,5 or 10 mm path
- 1 x axis for 1, 2, 5 or 10 mm path
- 1 x grease

Optional (recommended)

00P100010 **Protective cage**

- 1 x protective cage
- 1 x hexagonal offset screwdriver 5 mm

Keep the original packaging of the device for possible return shipment for maintenance or repair purposes.

NOTICE

If larger particles or objects are present in the seawater, you must use a protective cage to prevent damage to the wiper gear (for assembly, see...)

NOTICE

Never immerse the wiper in water without the axis installed! As no additional seal is installed, irreparable damage will occur which is not covered by the warranty.

3 Commissioning

This chapter covers the commissioning of the W55 V2 wiper up to the first function test. Please pay particular attention to this section and follow the safety instructions to protect the product from damage and yourself from injury. The cables must be connected correctly.

When commissioning the W55 V2 wiper, ensure that it is securely and correctly attached to the sensor and that all connections are connected correctly.

3.1 Inserting and changing the wiper blade

Before the wiper can be put into operation, the correct axis and wiper blade must be fitted. The wiper blades and the axis are not included in the scope of delivery of the wiper housing, as these must be selected depending on the path length of the sensor. A set of wiper blades contains five wiper blades and an axis of the appropriate size, including grease.

NOTICE

We recommend replacing the wiper blades every 4-5 weeks. The axis should be replaced every 5-6 months (new box).

NOTICE

The wiper blades and axis must always be selected to match the path length of the sensor, otherwise the measurement windows may be damaged.

1. first place the wiper blade on the axis. To do this, push the wiper blade onto the axis until you hear a click.

2. grease the O-ring on the axis slightly and insert the axis into the wiper housing. The axle groove is magnetically tightened and must be inserted as far as it will go and turned slightly if necessary until the correct position engages.

NOTICE

The wiper axis is only seated correctly when the O-ring is no longer visible and the axis is firmly engaged.

3. to change the wiper blade, it can be easily removed by slightly lifting the catch on the wiper blade and pulling the blade off.

NOTICE

External mechanical loads, such as turning the wiper or the axis by hand, can damage the gearbox!

If the wiper gets stuck in the light path or is jammed by an object, we recommend removing the wiper completely from the sensor to prevent damage to the gearbox. To do this, loosen the four screws on the wiper housing and remove the wiper from the sensor.

Alternatively, only the axis can be pulled out. This is held magnetically and only needs to be pulled out in the direction of the axle. Please remember to remove the wiper blade first.

3.2 Replacing the housing seal (O-ring) and the axis

It is recommended to replace the O-ring and the axis of the wiper every 5-6 months.

1. remove the axis with the wiper and the sealing ring.

NOTICE

Attention, the axis is held in place magnetically and must be pulled out in the direction of the axis. Do not attempt to unscrew the axis under any circumstances.

2. grease the O-ring of the new axis slightly and attach a new wiper blade.

3. insert the new axis with wiper blade and O-ring into the spring in the wiper housing. The axle groove is magnetically tightened and must be inserted as far as it will go and, if necessary, turned slightly until the correct position engages.

3.3 Installation of the wiper on the sensor

1. place the lower housing part of the wiper on the sensor and align it with the screw hole for the compressed air. Now tighten the adjusting screw including the O-ring.

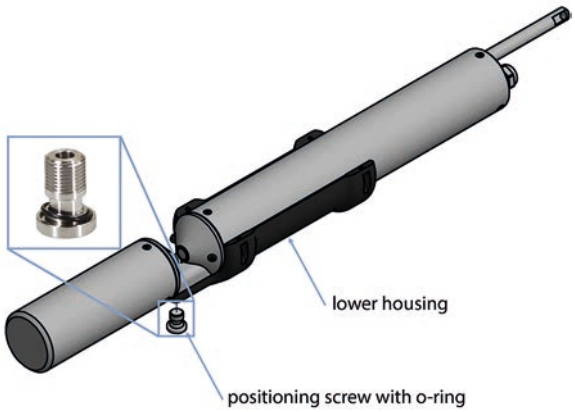

NOTICE

Please ensure that there is an O-ring on the adjusting screw.

2. place the upper part of the wiper housing on top and fasten with the four screws. When tightening the screws, first tighten all the screws very loosely and then gradually tighten the shells symmetrically to each other. Please note that there will be a small gap between the housing parts when installed correctly. The screws should therefore only be hand-tightened.

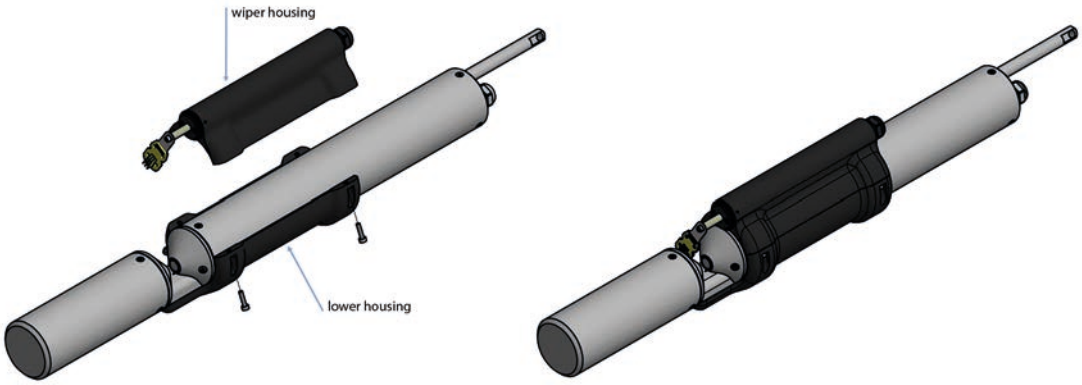

3.4 Connection overview

Cleaning control and power supply connected in parallel

When the wiper is connected using the M8 connection cable supplied (see option 1), the cleaning process is started automatically after a supply voltage of 12-24 VDC is applied.

This lasts for approx. 2-3 seconds (two wiping cycles) - the wiper then stops in the park position. For further wiping processes, the power supply must be interrupted for at least one second and then applied again.

IMPORTANT: The supply voltage must remain switched on until the wiping process is complete (reaching the park position), otherwise the wiper may stop in an undefined position. In the worst case scenario, it will then cover the light path and lead to incorrect measurements!

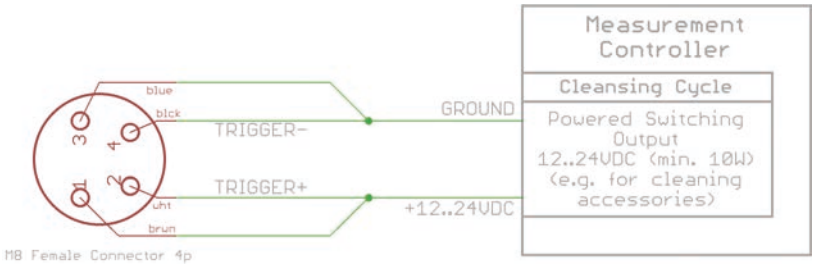

Option 1: M8 connection cable with open end, trigger is connected parallel to the power supply (included in delivery)

Cleaning control and power supply connected separately

For an alternative connection, in which the power supply and the cleaning control (trigger) are connected separately, the open end of the M8 cable can be disconnected (see option 2).

To do this, remove the double wire end sleeves and fit the individual wires with single wire end sleeves. The wiper can now be connected to a suitable DC voltage source according to the connection diagram in the figure in option 2. The trigger line can in turn be connected to a controller which controls the cleaning cycle. The wiping process is started by a voltage signal (5-24 V; min. duration: 100 ms) on the trigger line. Here too, two wiping cycles are carried out, which take approx. 2-3 seconds. A new wiping process can then be started by retriggering (pause between the intervals ≥ 1 second).

IMPORTANT: Even with this switching option, it must be ensured that the supply voltage remains switched on during the wiping process!

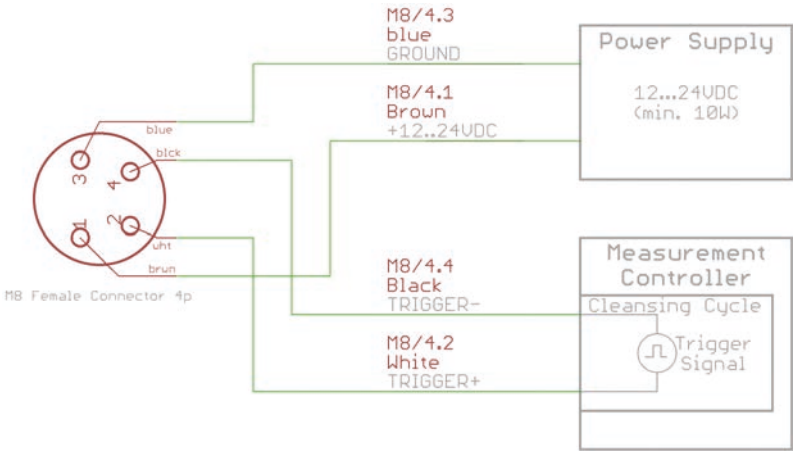

Option 2: M8 connection cable with open end, trigger and power supply are connected separately

4 Application

4.1 Connection to the TriBox3

Necessary components

TriBox3

Wiper

Open end cable

⚠ DANGER

Danger to life due to electric shock!
Disconnect the mains voltage before making any changes to the supply cable or plug.

It is essential to check that there is no voltage and to secure it against being switched on again.

NOTICE

For further safety instructions that must be observed, please refer to the TriBox3 operating instructions.

Connection

1. Open the cover of the TriBox3 by removing the dark gray panels and unscrewing the screws underneath.

2. Lay the wiper cable (control cable M8) through the cable guide of the TriBox3 and adjust the cable guide on the wider part of the cable.

3. Connect the blue-black wire of the wiper cable to pin 2 (GND) of the CON15 connector and the brown-white wire to pin 1 (+12 V) of the CON 15 connector, as described in the table below. Make sure that the screw contacts are tightened.

Wiper connection wire 4 x 0.34 mm2	TriBox3 slot
blue-black wire	CON15, pin 2, GND
brown-white wire	CON15, pin 1, +12 V

4. Close the TriBox3 cover, tighten the screws and place the gray covers on the TriBox3.
5. The wiper settings can now be adjusted in the TriBox3 menu under “Cleaning”. The cleaning time should be at least 10 seconds and the valve must be activated.

4.2 Connection to the TriBox mini

Necessary components

TriBox mini

Wiper

Open end cable

⚠ DANGER

Danger to life due to electric shock!
Disconnect the mains voltage before making any changes to the supply cable or plug.

It is essential to check that there is no voltage and to secure it against being switched on again.

NOTICE

For further safety instructions that must be observed, please refer to the TriBox mini operating instructions.

1. Open the cover of the TriBox mini by removing the dark gray panels and unscrewing the four screws underneath.

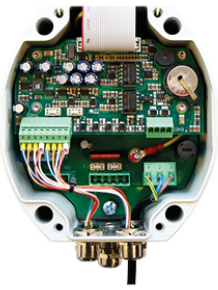

2. Lay the wiper cable through the cable guide of the TriBox mini and secure the cable guide.

3. Connect the blue-black wire of the wiper cable to pin 4 (VOUT-) of the CON2 connector and the brown-white wire to pin 3 (VOUT+) of the CON2 connector as described in the table below. Make sure that the screw contacts are tightened.

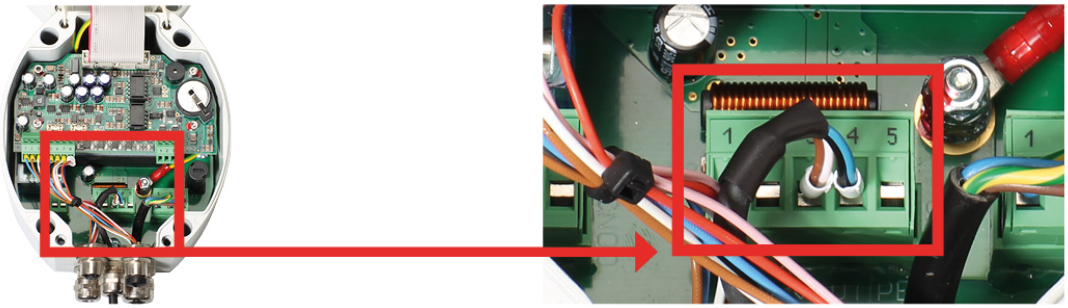

Wiper connection wire 4 x 0.34 mm2	TriBox mini slot
blue-black wire	CON2, pin 4, VOUT-
brown-white wire	CON2, pin 3, VOUT+

4. Close the TriBox mini cover, tighten the four screws and place the gray covers on the TriBox mini.
5. The wiper settings can now be adjusted in the TriBox mini menu under “Measurement & Cleaning”. Under “Cleaning settings”, the cleaning time should be at least 30 seconds and set to “active”.

5 Calibration

5.1 Service mode

Adjusting the starting position

The service mode is the new feature of the Wiper W55 V2. The service mode is activated by the magnet supplied and five full rotations are performed in both directions. This adjusts the starting position and lubricates the planetary gear in all directions.

It is recommended to first remove the top of the wiper from the sensor before activating service mode to prevent damage to the measurement windows and to ensure free rotation.

To increase the service life of the wiper, it is recommended to perform this function once a month.

NOTICE

To carry out service mode, the wiper must be connected to continuous power.

To activate the service mode, hold the magnet supplied against the housing in the area of the “S” marking. Move the magnet slightly around the marking to hit the activation point. As soon as the service mode is activated, the axis with the wiper blade will begin its full revolutions.

NOTICE

Service mode should never be activated with the wiper protective cage fitted, as this will damage the wiper.

6 Malfunction and maintenance

6.1 Blockage detection

After three wipes, the wiper blade always returns to the starting position. The position is briefly checked at the start of each operation. If the optical path is blocked, the wiper recognizes this and attempts to remove the obstructing component with very short wiping movements. If this is unsuccessful, the wiper blade can also be removed when dry and the axis pulled out individually to release the blockage manually.

NOTICE

Please note that the axis is held in place magnetically and must be pulled out in the direction of the axis. Never try to unscrew the axis!

6.2 Return shipment

Please note the procedure for your return.

If you are returning a sensor or device, please use the URL **trios.de/rma** to go to our **online form**, which you can use to register your return shipment to TriOS **technical support**.

To ensure a smooth return shipment process, please complete the online form in full. Please note the mandatory fields, otherwise the form cannot be sent. The system **automatically assigns an RMA number**.

After submitting your entries, you will immediately receive an e-mail with the data you have entered, a link to **free DHL shipping** and a label with the **RMA number of your case**.

Please make sure you stick this label **clearly visible on the** outside of **your return package** so that the package can be assigned more quickly.

Please note! Returns without an RMA number cannot be accepted and processed!

Please note that the sensor or the device must be cleaned and disinfected before shipping.

Use the original packaging to ensure that the goods are sent undamaged. If this is not available, ensure that safe transportation is guaranteed and that the sensors are secured with sufficient packing material.

We will contact you as soon as possible after receiving the return shipment.

7 Technical data

7.1 Technical specifications

Path lengths	1 mm, 2 mm, 5 mm, 10 mm	
Control port	4-pin M8 plug	
Trigger input	5-24 VDC (± 10 %)	
Current consumption Trigger input	2...15 mA	
Operating time (max.)	3 seconds	
Dimensions L x Ø	175 mm x 80 mm	6.9 " x 3.15 "
Weight	0.52 kg	1.15 lbs
Materials	NBR, POM, TPE (PP, EPDM), titanium; V4A	
Supply voltage	12-24 VDC (± 10 %)	
Power consumption	approx. 2-6 W in operation, max. 0.75 W in standby	
Maintenance effort	≤ 0.5 h/month typical	
Maintenance interval	Depending on application	
Warranty	1 year (EU & USA: 2 years)	
Max. Pressure	1 bar	14.5 psi
Protection type	IP68	
Inflow velocity	Up to 10 m/s	
Operating temperature	+2...+40 °C	+35.6...+104 °F
Storage temperature	-10...+70 °C	+14...158 °F

7.2 Outer dimensions

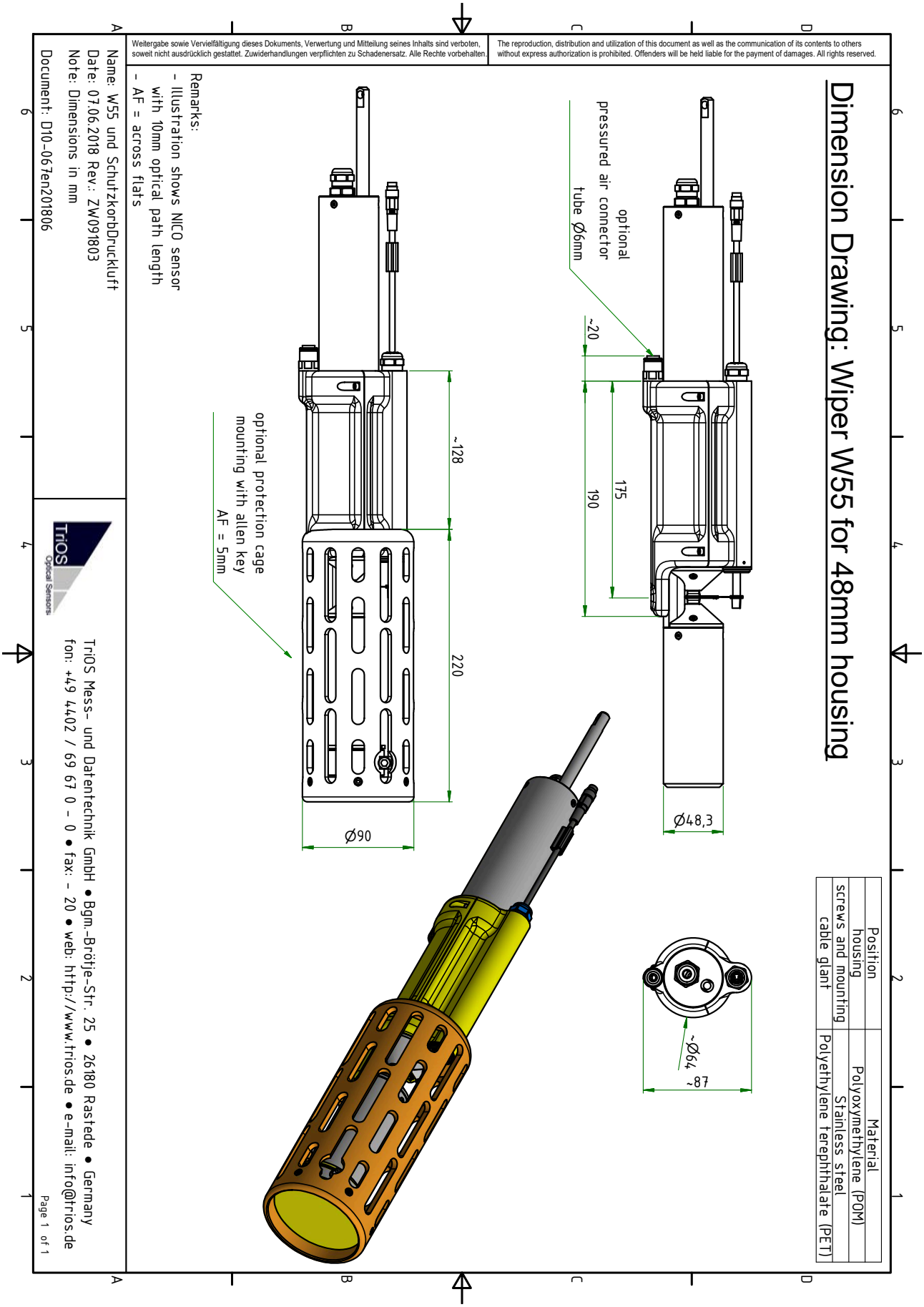

8 Accessories

8.1 Wiper protective cage

Item number 00P100010

NOTICE

The wiper protective cage is only suitable for use with OPUS and NICO sensors with a path length of 1-10 mm.

The protective cage made of sturdy plastic (POM) was developed to keep coarse dirt and larger objects away from the wiper and thus protect it from damage. However, the measuring medium can reach the optical path of the sensor unhindered through the recesses. The measured values are therefore not affected by unwanted soiling.

Technical specifications Wiper protective cage

Size L x Ø	220 mm x 88 mm	8.7 " x 3.5 "
Weight	~ 0.5 kg	~ 1.1 lbs
Material	POM	

Mounting the protective cage

1. To mount the protective cage on the sensor, the wiper must first be installed correctly (see chapter 3).

2. Slide the protective cage with the opening towards the wiper and align it with the wiper axis. The sensor must be centered in the holder provided inside the protective cage.

3. Once the protective cage has been fitted correctly, it must finally be fixed to the sensor using an Allen key (5 mm).

8.2 Compressed air purge

Compressed air purge

With the installation of the wiper on a sensor, it is also possible to install a compressed air purge. The use of compressed air supports the cleaning of the measurement windows in the event of heavy soiling.

Installing the compressed air purge on the wiper

NOTICE

Make absolutely sure that there is an O-ring on the adjusting screw.

1. The adjusting screw must be installed on the lower housing to mount the compressed air purge. Spare part (adjusting screw) Article number: 10P000000

2. The compressed air fitting must be inserted into the rear part of the housing so that a compressed air hose can be connected.
3. The compressed air purge is now ready for use and the compressed air is directed into the optical path via the wiper and supports the cleaning process.

9 Warranty

The warranty period for our devices within the EU and the USA is 2 years from the date of invoice. Outside the EU it is 1 year. Excluded from the warranty are all normal consumables
(depending on the product, e.g. light sources or windows).

The warranty is subject to the following conditions:

- The device and all accessories must be installed as described in the relevant manual and operated in accordance with the specifications.
- Damage caused by contact with aggressive and material-damaging substances, liquids or gases, as well as transport damage, are not covered by the warranty.
- Damage caused by improper handling and use of the device is not covered by the warranty.
- Damage caused by modification or unprofessional attachment of accessories by the customer is not covered by the warranty.

NOTICE

Opening the device will void the warranty!

10 Technical support

If you have a problem with a TriOS sensor / a TriOS device, please contact TriOS technical support.

We recommend sending in sensors every 2 years for maintenance and calibration. When returning devices, please be sure to follow the procedure described in Chapter 6.

Contact technical support:

E-mail: support@trios.de
Phone: +49 (0) 4402 69670 - 0
Fax: +49 (0) 4402 69670 - 20

To enable us to help you quickly, please send us the sensor ID number (serial number with 8 digits, consisting of letters and numbers, e.g. 6700003F) by e-mail.

11 Contact us

We are constantly working on improving our devices. Please visit our website for the latest news.

If you have found a fault in one of our devices or programs or would like additional functions, please contact us:

Technical Support:	support@trios.de
General questions/sales:	sales@trios.de
Website:	www.trios.de

TriOS Mess- und Datentechnik GmbH
Bürgermeister-Brötje-Str. 25
26180 Rastede
Rastede, Germany

Telephone	+49 (0) 4402 69670 - 0
Fax	+49 (0) 4402 69670 - 20

12 Index

A

Accessories.... 20
Adjusting the starting position.... 16

B

Blockage detection.... 17

C

CE declaration of conformity.... 27
Certificates and approvals.... 5
Cleaning control.... 10
Commissioning.... 8
Compressed air purge.... 22
Connection overview.... 10
Contact us.... 25
copyright.... 3

D

disposal.... 5

E

Electromagnetic waves.... 4

H

Health and safety instructions.... 3

I

Installation.... 10
Intended use.... 5

O

operating requirements.... 4
Outer dimensions.... 19

P

power supply.... 10
Product identification.... 6

R

Return shipment.... 17

S

Scope of delivery.... 7

T

Technical specifications.... 18
Technical support.... 24, 25
type plate.... 6

W

Warning notices.... 4
Warranty.... 23
Wiper protective cage.... 20

13 Appendix

13.1 CE declaration of conformity

Hersteller/Manufacturer/Fabricant:	TriOS Mess- und Datentechnik GmbH Bürgermeister-Brötje-Str. 25 D- 26180 Rastede

Konformitätserklärung
Declaration of Conformity
Déclaration de Conformité

Die TriOS GmbH bescheinigt die Konformität für das Produkt
The TriOS GmbH herewith declares conformity of the product
TriOS GmbH déclare la conformité du produit

Bezeichnung Product name Désignation	**Wischer W55 V2**
Typ / Type / Type	-
Mit den folgenden Bestimmungen With applicable regulations Avec les directives suivantes	2014/30/EU EMV-Richtlinie 2011/65/EU RoHS-Richtlinie + (EU) 2015/863 + (EU) 2017/2102
Angewendete harmonisierte Normen Harmonized standards applied Normes harmonisées utilisées	EN IEC 61326-1:2021 EN 61010-1:2010 +A1:2019 +A1:2019/AC:2019 EN IEC 63000:2018
Datum / Date / Date	Unterschrift / Signature / Signature
23.05.2024	R. Heuermann

D05-067yy202405

Seite 1 von 1

TriOS Mess- und Datentechnik GmbH
Bgm.-Brötje-Str. 25 · 26180 Rastede · Deutschland
Tel +49 (0)4402 69670-0
Fax +49 (0)4402 69670-20
info@trios.de
www.trios.de