TriOS

xylem

Chlorine Dioxide

OPERATING INSTRUCTIONS

Table of Contents

1 General Information 2
1.1 Introduction 2
1.2 Health and safety information 3
1.3 Warnings 4
1.4 Users and Operating Requirements 4
1.5 Intended use 5
1.6 Disposal Information 5
1.7 Certificates and Approvals 5

2 Introduction 6
2.1 Product Identification 6
2.2 Scope of Delivery 7
2.3 Measurement Principle and Design 7

3 Commissioning 8
3.1 Preparation of the Sensor for Commissioning 8
3.2 Electrical installation 10
3.3 Interfaces 11
3.4 Measurement 11

4 Use 12
4.1 Installation with retaining ring in the flow cell 13

5 Calibration 14
5.1 Manufacturer Calibration 14
5.2 Customer calibration 14
5.3 Measurement properties 15

6 Malfunction and Maintenance 16
6.1 Cleaning and Upkeep 16
6.2 Maintenance and inspection 16
6.2.1 Electrolyte Replacement 17
6.2.2 Membrane cap replacement 17
6.2.3 Sensor Check 18
6.2.4 Storage 18
6.3 Troubleshooting 18
6.3.1 General Troubleshooting 19
6.3.2 Special Troubleshooting on the Sensor 22
6.4 Returns 25

7 Technical Data 26

8 Accessories 27
8.1 Controller 27
8.1.1 TriBox3 27
8.1.2 TriBox mini 27

9 Warranty 28

10 Customer service 29

11 Contact 28

12 Keyword Index 32

Annex 34

1 General Information

1.1 Introduction

Welcome to TriOS.

We are glad that you have chosen to purchase our chlorine dioxide sensor.

The chlorine dioxide sensor from the eCHEM sensors product range is an electrochemical sensor for measuring the chlorine dioxide concentration in water. The range of application of the sensor covers almost all water qualities and treatments (e.g. bottle washing machine, CIP system, rinser). It can also be used in seawater. Thanks to a special membrane system, the sensor is particularly resistant to chemicals and surfactants.

In this manual, you will primarily only find information you will need to commission the eCHEM chlorine dioxide sensor. Technical specifications can be found in chapter 7. The corresponding operating instructions of the peripheral devices must be observed.

Please note that the user is responsible to comply with local and state regulations for the installation of electronic equipment. Any damage caused by incorrect use or unprofessional installation will not be covered by the warranty. All sensors and accessories supplied by TriOS Mess- und Datentechnik GmbH must be installed and operated in accordance with the specifications provided by TriOS Mess- und Datentechnik GmbH. All parts were designed and tested in accordance with international standards on electronic instruments. The device meets the requirements of the international standards on electromagnetic compatibility. Please use only original TriOS accessories and cables to ensure reliable and correct operation of the devices.

Before using the device, read the manual carefully, and keep this manual on hand for future reference. Before commissioning the sensor, please make sure that you have read and understood the following safety precautions. Always make sure that the sensor is operated correctly. The safety precautions described on the following pages should ensure the reliable and correct operation of this device and any additional associated devices and should prevent injuries to yourself or other persons and damage to other equipment.

NOTICE **If the translation is at all different from the original German text, the German version is binding.**

Copyright Notice

All of the content in this manual, including texts, photographs and graphics, are protected by copyright. Unless expressly stated otherwise, TriOS Mess- und Datentechnik GmbH is the owner of the copyright. Persons who violate the copyright shall be liable pursuant to § 106 et seq of the copyright law, they will be warned at their own expense and must pay compensation.

1.2 Health and safety information

This manual contains important information about health and safety rules. This information is labelled according to the international specifications of ANSI Z5356 ("Product safety information in product manuals, instructions and other collateral materials") and must be strictly followed. The following are distinct categories:

⚠ **DANGER**	**Danger warning / will lead to serious injury or death**
⚠ **WARNING**	**Warning / may lead to serious injury or death**
⚠ **CAUTION**	**Caution / may cause moderate injury**
NOTICE	**Can result in damage to property**

Tip / Useful Information

Electromagnetic waves

Devices that radiate strong electromagnetic waves can influence the measurement data or result in a malfunction of the sensor. Avoid using the following devices in the same room as the TriOS sensor: mobile phones, cordless phones, transmitters/receivers and other electrical devices that produce electromagnetic waves.

Reagents

Follow the safety and operating instructions of the manufacturer when using reagents. Observe the valid Hazardous Materials Ordinance for reagents (German GefStoffV)!

Biological safety

Liquid waste may be a biohazard. Therefore, you should always wear gloves when working with such materials. Please observe the currently valid biological agents regulation! (German BioStoffV)

Waste

When handling liquid waste, observe the regulations on water pollution, drainage and waste disposal.

1.3 Warnings

- The sensor should only be used in drinking water, swimming pool water or sea water, other water qualities should be tested.
- Any other use is considered improper. In the event of improper use, all warranty claims are void and liability is excluded.
- The sensor may only be used to determine and control the chlorine dioxide concentration.
- The sensor is not suitable for checking the absence of chlorine dioxide.

NOTICE **Do not touch the electrode finger or otherwise contaminate it! Do not remove the coating of the electrode finger!**

- The material resistance should be tested for each application.
- Do not cut, damage or change the cable. Make sure that no heavy objects are placed on the cable and that the cable is not kinked. Make sure that the cable is not run near hot surfaces.
- Do not place any unsuitable objects near the measuring head as long as the measurement process is running, as this can cause damage to the membrane or incorrect measurement results.
- Stop operation of the sensor in the event of excessive heat development (i.e. if it is hot to the touch). Switch off the sensor immediately and remove the cable from the power supply. Please contact your dealer or the TriOS customer service.
- Never try to disassemble or modify the electrode body of the sensor if such a procedure is not explicitly described in this manual. Inspections, modifications and repairs may only be carried out by the dealer or by qualified experts authorized by TriOS.
- If the associated cable is damaged, it must be replaced with an original part by the customer service of TriOS GmbH.
- When installing the sensor outside Germany, the relevant national regulations must be observed.
- No liability is assumed for personal injury or damage to property resulting from non-observance of these operating instructions, modification of the sensor or its improper use.
- Devices from TriOS Mess- und Datentechnik GmbH meet the highest safety standards. Repairs to the device (which involve the replacement of the connecting cable) must be carried out by TriOS Mess- und Datentechnik GmbH or by a workshop authorized by TriOS. Defective, improper repairs can lead to accidents and injuries.

⚠ DANGER **TriOS does not guarantee the plausibility of the measured values. The user is always responsible for the monitoring and interpretation of the measured values.**

1.4 User and Operating Requirements

The chlorine dioxide sensor has been developed for use in industry and science. The implementation of chlorine dioxide determination with test kits often requires the handling of hazardous substances.

We assume that the operating personnel are familiar with dealing with dangerous substances based on their professional training and experience. The operating personnel must be able to correctly understand and implement the safety labels and information on the packaging and in the package inserts of the test kits.

1.5 Intended use

The purpose of the eCHEM chlorine dioxide sensor is exclusively to measure the chlorine dioxide concentration as described in this manual. The chlorine dioxide sensor should only be used in conjunction with a flow cell. Please note the technical data of the accessory parts. Other uses do not comply with the intended use.

The sensor may only be used for the measurement of chlorine dioxide in aqueous fluids such as drinking water, swimming pool water or sea water. Use in other media can damage the sensor. For the use of the chlorine dioxide sensor in other media than those specified in this manual, please contact the customer service of TriOS Mess- und Datentechnik GmbH (support@ trios. de).

NOTICE	**Avoid any contact with the membrane that could scratch or dirty it. This would no longer guarantee the functionality of the device.**

According to current scientific knowledge, the device is safe to use when it is handled according to the instructions in this user manual.

1.6 Disposal Information

At the end of the device's life or use, the device and its accessories can be returned for environmentally friendly disposal for a fee (see addressbelow). The preceding professional decontamination of the device must be proven with a certificate. Please contact us for more details before you send the device back.

Address of the dealer:

TriOS Mess- und Datentechnik GmbH
Bürgermeister-Brötje-Str. 25
D-26180 Rastede
Germany

Telephone: +49 (0) 4402 69670 - 0

Fax: +49 (0) 4402 69670 – 20

1.7 Certificates and Approvals

This product meets all of the requirements of the harmonised European standards. It therefore meets the legal requirements of the EU guidelines. TriOS Mess- und Datentechnik GmbH confirms the successful testing of the product by affixing the CE marking. (See Annex.)

2 Introduction

2.1 Product Identification

All TriOS Mess- und Datentechnik GmbH products have a label, which clearly shows the product designation.

There is also a rating plate on the sensor with the following information that you can use to uniquely identify the product:

Serial number

Product type

Power supply

Interface

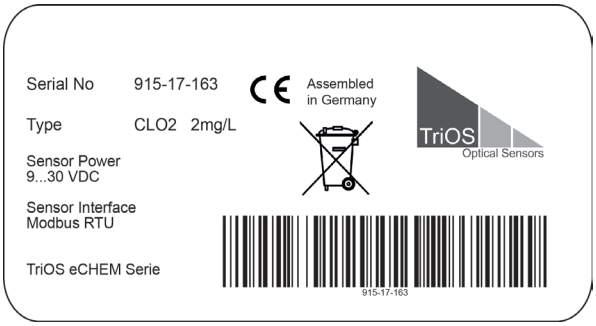

In addition to the product bar code, the rating plate includes the TriOS Mess- und Datentechnik GmbH logo and the CE quality label.

Please note that the specifications given here are for illustration purposes only and may be different depending on the version of the product.

2.2 Scope of Delivery

The shipment contains the following components:

- Sensor with membrane cap M10.1N
- 100 ml gel electrolyte ECD4/W*ECD7/W
- Fine sandpaper S2
- 1 G-holder with O-ring
- Tweezers
- Operating instructions

Keep the original packaging of the device in case it needs to be returned for repairs.

2.3 Measurement Principle and Design

The chlorine dioxide sensor is a membrane-covered amperometric 2-electrode sensor. The measuring electrode is covered by a membrane and, together with the combined counter and reference electrode, is located in an electrolyte chamber separated from the sample water, which contains a special gel electrolyte.

In this measuring method, chlorine dioxide diffuses from the sample water through the membrane. When the chlorine dioxide combines with the electrolyte at the measuring electrode, an electrical signal is triggered. This signal is proportional to the chlorine dioxide concentration and is amplified by the sensor electronics. Due to an integrated temperature compensation, the measuring signal is independent of the temperature of the sample water. Surfactants are tolerated as far as possible.

3 Commissioning

This chapter deals with the commissioning of the chlorine dioxide sensor. Please pay particular attention to this section and follow the safety precautions to protect the sensor from damage and yourself from injury. Prior to electrical installation (chapter 3.2) of the sensor, it must first be filled with gel electrolyte as described in chapter 3.1.

Before the sensor can be put into operation, it must be ensured that the sensor is securely attached and all connections are correctly made.

The following installation requirements must be met:

- Permanent power supply and presence of sample water
- Flow rate according to data sheet
- Constant flow rate
- Disinfectant must be present in the sample water.
- Galvanic isolation of the electrical connection (if not present in the sensor)
- The sample water must not outgas at the measuring point.

NOTICE	**Gel electrolytes must not be shaken and must be stored upside down or on the sealing cap after opening.**

⚠ CAUTION	**Some electrolytes contain diluted acids. Therefore, observe the warning notices on the electrolyte bottle. Do not swallow the gel electrolyte. In case of skin or eye contact with the electrolyte, rinse the affected areas thoroughly with water. Consult an ophthalmologist if the eyes are reddened.**

3.1 Preparation of the Sensor for Commissioning

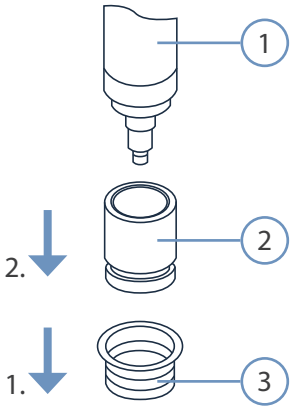

Remove the protective cap [3] from the membrane cap [2].
Unscrew the membrane cap [2] from the sensor body [1].

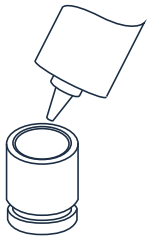

Place the membrane cap on a clean surface and fill to the rim with gel electrolyte.

Place the G-holder on a clean surface with the fabric facing down and moisten the G-holder with gel electrolyte.

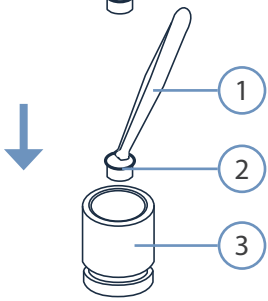

Use the tweezers [1] to grasp the G-holder [2] with the fabric facing down and place the G-holder centrally on the membrane in the membrane cap [3].

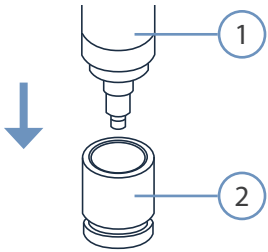

Carefully pull the tweezers out of the membrane cap again.
The G-holder is now placed in the membrane cap.
Place the sensor body [1] upright on the membrane cap [2] and turn it counterclockwise until the thread is engaged.

Slowly screw the sensor body into the membrane cap.

NOTICE **Make sure that the membrane cap is completely screwed onto the sensor body, i.e. as far as it will go. Neither touch nor strike the membrane!**

Rinse off electrolyte residues adhering to the outside of the sensor with tap water.

The sensor is ready for commissioning.

3.2 Electrical installation

The chlorine dioxide sensor is equipped with an 8-pin M12 screw connector for electrical commissioning. The following figure shows the pin assignment of the connector:

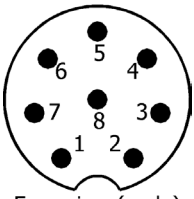

Face view (male)

1. RS-485 A (commands)
2. RS-485 B (data)
3. Not assigned
4. Not assigned
5. Not assigned
6. Not assigned
7. Ground (Power + Ser. Interface)
8. Power (9...30 VDC)

Insert the connector into one of the supplied TriOS cables. Connect the male end of the cable into the connector on the sensor by making the pins align with the slots of the cable. The next step is to turn the locking sleeve clockwise to secure the end of the connector.

The sensor may only be operated with the specified supply voltage.

Make sure that the supply voltage of the controller is constant! A supply voltage that is too low causes an incorrect measured value and can lead to dangerous over-metering in a control loop. The sensors must be operated potential-free. There must be no current flow between the sensors and the measuring medium. Measuring and control devices must therefore have galvanic isolation.

3.3 Interfaces

The chlorine dioxide sensor with digital signal processing has a digital Modbus RTU interface (RS-485). The pin assignment has already been explained in more detail in chapter 3.

The interface must be configured as follows:

- Baud rate: 9600 bps
- Data bits: 8
- Stop bits: 1
- Parity: none
- Flow control: none

A detailed description of the Modbus protocol commands can be found in the Annex.

3.4 Measurement

The sensor must be used for measurements in the flow cell type FLC (see chapter 4). The use of the sensor in other flow cells must be approved by TriOS GmbH. Otherwise, no warranty will be given for the proper functioning of the sensor or for resulting damage to property or personal injury.

The maximum permissible operating pressure of the sensor is 1.0 bar (with retaining ring). The permissible temperature operating range of the sensor is 0 to <50 °C. The sensor may only be used to determine and control the chlorine dioxide concentration.

As soon as the sensor is supplied with power, it starts measuring automatically. The measured values can be displayed, converted or stored using a TriOS controller.

Please also refer to the corresponding controller manuals! If the sensor is not recognized by the controller, the configuration of the interface should be checked directly (see chapter 3.3).

4 Use

The chlorine dioxide sensor can be operated with all TriOS controllers. Instructions for correct installation can be found in the relevant controller manual.

A bypass installation of the sensor is essential for correct results. Therefore we strongly recommend to use the sensor in the flow cell type FLC for permanent use.

NOTICE **The use of the sensor without flow cell is not recommended and can lead to loss of warranty.**

Dimensions in mm

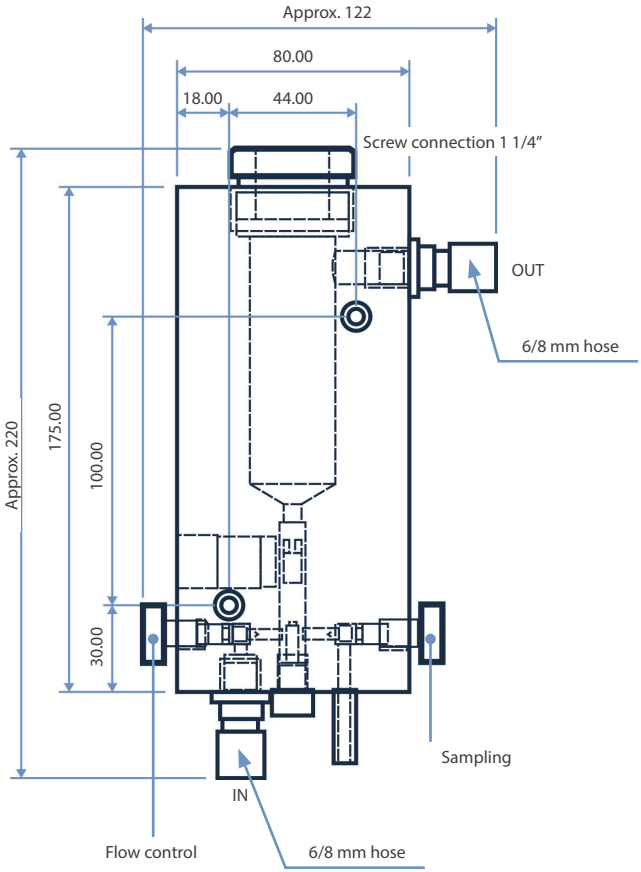

Before installing the sensor in the flow cell type FLC, make sure that there is no pressure in the system. Close the shut-off valves upstream and downstream of the flow-through fitting. Push the sensor slowly into the flow-through fitting. The sensor must not be pushed against the bottom of the fitting.

NOTICE	**A sudden failure of the sensor can lead to dangerous over-metering. Take appropriate precautions in this case! Check system for odour, check water for abnormal discolouration. In case of strong over-metering, the DPD-1 measurement can remain colourless because the dye is bleached by the chlorine present.**

4.1 Installation with retaining ring in the flow cell

For installation in a flow cell, you need the sensor for chlorine dioxide measurement on the one hand and the flow cell on the other.

1. To install the sensor in the flow cell, you must first remove the screw connections on the flow cell FLC.
2. Push the slide ring from the FLC under the retaining ring of the sensor.
3. Push the 25x2.5 O-ring (silicone) underneath the slidw ring over the sensor (see figure).

Make sure that the sensor is prepared as described in chapter 3.
Make sure that the 30x2.6 O-ring (Viton) is still in the flow cell at the insertion edge.

4. Now slowly insert the prepared sensor into the flow cell as shown in the figure.
5. Carefully slide the screw connection over the sensor and screw it tight, otherwise leaks may occur!
6. Open the sample water drain.
7. Slowly open the sample water inlet.

Avoid installations where air bubbles can form in the sample water.

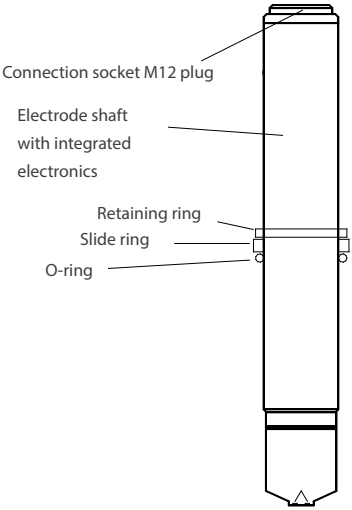

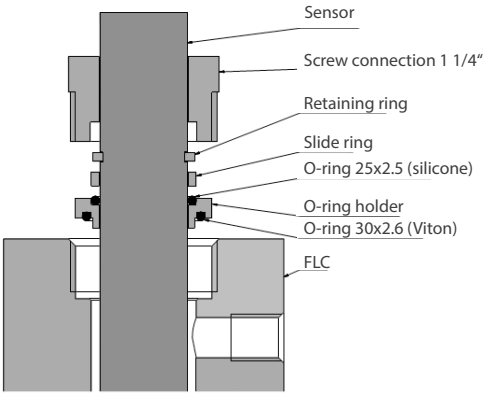

Operating mode	Flow-through fitting	Max. operating pressure	Max. operating temperature	Flow rate
Sensor operation **with** retaining ring				
	FLC	1.0 bar (10 mH2O)	50 °C	15-30 L/h

IMPORTANT	Observe and adhere to the max. permitted operating pressure / operating temperature of the sensor!

5 Calibration

5.1 Manufacturer Calibration

No manufacturer calibration is performed due to application-related changes in measured values (pH, inflow velocity, etc.) The sensors are only tested under standard conditions (concentration, pH, inflow velocity etc.) in an endurance test.

5.2 Customer calibration

A customer calibration using the DPD-1 method ("chlorine dioxide") must be carried out in the application. The installation and other conditions must match the final application.

The determination of chlorine dioxide is also possible with a photometer for chlorine if the result is multiplied by the factor 1.9.

Recommendation: Weekly control, if necessary more frequently. In case of a necessary recalibration, operation with a TriOS controller is recommended. An integrated wizard guides the user step by step through a calibration menu. The value determined analytically in parallel by the DPD method is set as the reference value in the controller.

Please note the following explanations for direct Modbus access:

Calibration

The values for zero point (X_Null), slope (X_Span) and then date and time are written to the sensor. The sensor electronics accepts the new calibration data if the date stamp is sent within approx. 5 seconds following the values. If the date differs from that of the last calibration, the new values are stored in the history memory and the oldest values are overwritten.

Date / Time stamp

- Data type: unsigned long
- $2^{32} = 4294967296$
- Year: (20)42, Month: [94], Day [96], Hour [72], Min: [96]
- Last possible date: 31.12.2042, 23:59

5.3 Measurement properties

The following instructions must be observed when operating the sensor:

- The sensor must be operated in an upright position so that the incoming flow of sample water comes from below up against the membrane.
- Outgassing sample water interferes with the measurement. During unpressurised operation with free outflow of the sample water gas bubbles have no disturbing effect as long as they do not cover the membrane. Gas bubbles in front of the membrane prevent the chlorine dioxide from entering the gel electrolyte, which falsifies the measuring signal.
- A minimum inflow velocity (>15 L/h) is required. The flow rate must be constant.
- The service life of the membrane is typically 1 year, but it depends very much on the water quality. Heavy soiling of the membrane must be avoided.
- The supply voltage of the sensor must not be switched off during interval operation of the measuring system. The sensor must be permanently connected to the supply voltage. The sensor must not stand dry.
- The sensor must not be operated for a longer period of time (>1 day) in chlorine dioxide free water. There is a risk that deposits/soiling (e.g. biological) will form on the membrane, which makes later chlorine dioxide measurement impossible. After operating the sensor in chlorine-dioxide-free water, longer stabilization times must be expected. If required, re-dosing should take place with a time delay. If no chlorine dioxide is expected over a longer period of time, the sensor must be separated from the controller, removed and stored in a dry place.
- The presence of reducing and oxidizing agents as well as corrosion inhibitors can interfere with the measurement.

6 Malfunction and Maintenance

To ensure error-free and reliable measurement, the chlorine dioxide sensor should be cleaned and serviced at regular intervals. When carrying out maintenance and in the event of a malfunction, the entire system from the extraction point to the drain must always be taken into account. The system usually consists of:

- Chlorine dioxide sensor
- Electrical wiring and connections
- Flow-through fittings and connections
- Measuring and / or control device
- Dosing device
- Analysis kit

Before removing the sensor, downstream controllers should be switched off or switched to manual operation. If the sensor is removed, an incorrect measured value may occur at the input of the controller and lead to uncontrolled dosing in a control loop. Shut off the sample water inlet and outlet. Remove the electrical connection.

6.1 Cleaning and Upkeep

To ensure a long service life of the chlorine dioxide sensor, it should be checked regularly for contamination. Carefully rinse off any soiling on the outside with water. In case of heavy soiling it is recommended to change the gel electrolyte and/or the membrane cap. A detailed description on how to change the gel electrolyte and the membrane cap is given in the following chapter 6.2.

If you have further questions on this topic, we would be pleased to help you. Please contact our customer service at support@trios.de.

6.2 Maintenance and inspection

The sensor should be checked regularly for contamination, fouling and bubbles on the outside of the membrane. Avoid contamination of the membrane with particles, condensation etc. as far as possible. Bubbles on the outside of the membrane can be eliminated by briefly increasing the flow rate.

After a membrane cap or electrolyte change, a slope adjustment must be carried out.

NOTICE	**The coating of the electrode finger must not be sanded down. Do not unscrew the membrane disc holder from the membrane cap, as the membrane may be damaged and the adjustment may be lost!**

The use of warm water is recommended for rinsing off the gel electrolyte residues on the electrode finger and in the membrane cap.

6.2.1 Electrolyte Replacement

It is recommended to replace the gel electrolyte at least twice a year or when an adjustment is no longer possible due to readings that are unstable or too low.

Carry out the following steps one after the other:

1. Unscrew the membrane cap.
2. Use the tweezers to remove the G-holder from the membrane cap.
3. Empty the gel electrolyte from the membrane cap.
4. Rinse the electrode finger with tap water.
5. Shake the sensor body dry several times so that the pressure equalization opening [1] is emptied (see figure).

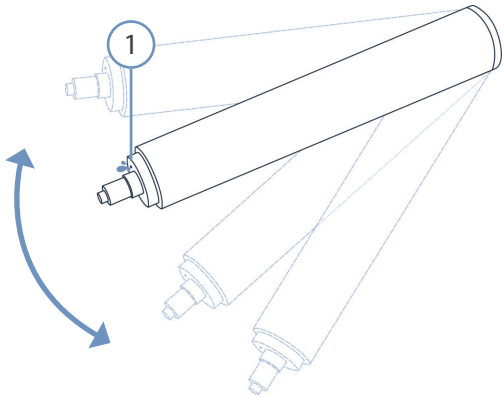

6. Place the special sandpaper on a paper towel.
7. Hold the sensor upright.
8. Hold the special sandpaper and run the tip of the working electrode at least twice over it. Use a new surface of sandpaper each time (see figure).

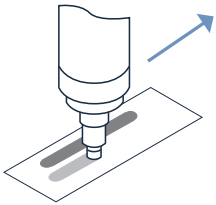

6.2.2 Membrane cap replacement

It is recommended to replace the membrane cap once a year or when an adjustment is no longer possible due to readings that are unstable or too low.

The new membrane cap is supplied with the G-holder. To replace the membrane cap, please follow the commissioning procedure (see chapter 3.1).

6.2.3 Sensor Check

An adjustment or a check of the sensor according to the DPD-1 method should be carried out regularly at specific intervals, depending on the requirements.

Recommendation: Weekly control, if necessary more frequently.

It is recommended to replace the electrolyte at least twice a year.

Sensors with digital internal signal processing

The mounting of the socket on the sensor is transparent. Two light emitting diodes (green and orange) are visible:

Green LED	Continuous light: Power supply is correct. Program in the processor is running. Flickering or no light: Indicates low voltage and resulting processor malfunction.
Orange LED	No light: (all correct) Sensor signal has the right polarity. Continuous light: indicates wrong polarity of the sensor signal. Multiply the displayed output signal by -1. Regular flashing: The chlorine sensor is overloaded. Cause: Chlorine dioxide concentrations too high. (Due to the different sensitivities/slopes of the chlorine dioxide sensors, an overdrive may occur even if the maximum measuring range is not reached yet.)

6.2.4 Storage

To store the sensor, unscrew the membrane cap, rinse the membrane cap and electrode holder with clean water and dry in a dust-free place. The dry membrane cap is then screwed loosely onto the electrode shaft to protect the electrode finger. The membrane must not be in contact with the measuring electrode.

When the electrode is put back into operation, clean the electrode tip with special sandpaper and use a new membrane cap (see section 6.2.2).

Used membrane caps, which were once in operation, cannot be stored and reused again.

6.3 Troubleshooting

For a targeted error analysis, the entire system from the extraction point to the drain must always be taken into account. The system usually consists of:

- Sensor
- Electrical wiring and connections
- Flow-through fittings and connections
- Measuring and / or control device
- Dosing device
- Analysis kit

In most cases, a faulty measurement is corrected by cleaning the electrode, replacing the electrolyte or changing the membrane cap. In the case of electronic faults, there is no possibility of repairing the electrode body adequately on site. The chlorine dioxide sensor must be sent back to the manufacturer for troubleshooting. When returning a sensor, always follow the procedure described in chapter 6.4, including provision of the RMA number.

In the following, detailed troubleshooting instructions are given, which are intended to enable a clear assessment of the fault and to provide appropriate guidance. A distinction is made between general troubleshooting (chapter 6.3.1) and special troubleshooting on the sensor (chapter 6.3.2).

6.3.1 General Troubleshooting

Fault	Possible cause	Action
Sensor cannot be calibrated / measured value deviates from DPD measurement	Run-in time too short	Repeat calibration after a few hours
	Membrane cracked	Replace membrane cap (see chapter 6.2.2)
	Membrane cap damaged	Replace membrane cap (see chapter 6.2.2)
	Interfering substances in the water	Examine water for interfering substances and remedy
	Short-circuit / defect in the measuring line	Locate and eliminate short-circuit / defect, replace measuring line if necessary
	Distance between membrane and electrode is too great	Screw on the membrane cap completely as far as it will go
	DPD chemicals too old	Use new DPD chemicals and repeat calibration
	Deposits on the membrane	Replace membrane cap (see chapter 6.2.2)
	Air pockets between G-holder / membrane / working electrode	Unscrew the membrane cap Use tweezers to remove the G-holder from the membrane cap Repeat commissioning (see chapter 3)
	Gas bubbles on the outside of the membrane	Briefly increase the flow rate, check and change the installation if necessary
	Sensor defective	Send in sensor to be checked / overhauled
	No electrolyte in the membrane cap	Fill the membrane cap with electrolyte (see chapter 6.2.1)
	Chlorine dioxide content exceeds upper measuring range limit	Check system, remedy fault, repeat calibration
	Missing galvanic isolation	Establish galvanic isolation. Send in sensor to the supplier to be checked / overhauled.

Fault	Possible cause	Action
Unstable measuring signal	Membrane cracked	Replace membrane cap (see chapter 6.2.2)
	Air bubbles in the electrolyte (especially during operation under pressure)	Empty the membrane cap and fill with new electrolyte bubble free (see chapter 6.2.1)
	Gas bubbles on the outside of the membrane	Briefly increase the flow rate, check and change the installation if necessary
	Pressure fluctuations in the measuring medium	Check installation type and change if necessary
	Missing galvanic isolation	Establish galvanic isolation. Send in sensor to the supplier to be checked / overhauled.
	Reference electrode exhausted and/ or contaminated (shimmers silvery or white).	Send in sensor for maintenance
Overdrive (orange LED flashing regularly)	Too high concentration of disinfectant in the sample water	Check system Rectify fault Calibrate sensor (see chapter 5) Service sensor (see chapter 6.2)
	The run-in time is too short.	Wait until the run-in time has passed (see chapter 7)
	The membrane is damaged.	Replace membrane cap (see chapter 6.2.2)
	Too high inflow	Check system and reduce flow rate
	Missing galvanic isolation	Establish galvanic isolation and, if necessary, send in sensor to the supplier to be checked / overhauled
	The sensor is defective.	Send in sensor to the supplier to be checked / overhauled.
Underdrive	The run-in time is too short.	Wait until the run-in time has passed (see chapter 7)
	The working electrode is contaminated.	Service the sensor (see chapter 6.2)
	Missing galvanic isolation	Establish galvanic isolation and, if necessary, send in sensor to the supplier to be checked / overhauled
	The sensor is defective.	Send in sensor to be checked / over-hauled

Fault	Possible cause	Action
No signal	The measuring line is interrupted.	Replace the measuring line.
	The sensor is not supplied with power.	Establish correct power supply.
	The sensor is defective.	Send in sensor to the supplier to be checked / overhauled.

Only applies to sensors with digital internal signal processing:

Fault	Possible cause	Action
Green LED Flickering or no light	Too low voltage -> faulty processor function	Establish correct power supply
	Sensor defective	Send in sensor for maintenance
Orange LED Continuous light	Incorrect polarity of the sensor signal -> displayed output signal must be multiplied by -1	Service the sensor according to chapter 6.2 or send in the sensor for maintenance
	Underdrive	See chapter 6.3.1, section Underdrive
Regular flashing	Sensor is overloaded -> chlorine dioxide concentration too high	Check system, rectify faults, calibrate or service sensor if necessary

6.3.2 Special Troubleshooting on the Sensor

If the electrode finger turns shiny silver or white, the sensor must be serviced by the manufacturer. Brown-grey discolourations are common.

Tightness test of membrane cap	1. Unscrew the membrane cap from the sensor 2. Carefully dry the outside of the membrane cap to be tested 3. Prepare the membrane cap for installation according to the operating instructions and fill with gel electrolyte 4. If necessary, dry the membrane cap again on the outside 5. Screw the membrane cap slowly and carefully onto the sensor according to the operating instructions 6. When screwing on the membrane cap, check whether electrolyte gel escapes through the membrane **NOTICE** **Carefully check whether the electrolyte is escaping through the membrane or if it is sealing properly at the intended points; repeat the tightness test if necessary.** -> If a drop or a drop flow forms on the membrane, it is defective and a new membrane cap must be used. -> Check whether the reference electrode has been damaged by the exchange between measuring medium and electrolyte. If it is no longer in perfect condition, send in the sensor for inspection.
Electronics test (dry test)	1. Unscrew the membrane cap 2. Rinse electrode finger carefully, dry carefully with a clean cloth 3. Connect sensor to controller, wait for approx. 5 min 4. Read the original sensor signal from the controller Controller must display 0 ppb. -> If the sensor signal corresponds approximately to the above-mentioned value, the electronics are likely to be OK. -> If the measured value deviates significantly from the above-mentioned value, the sensor must be sent in for inspection.

Zero point test	After electronics test: 1. Prepare the sensor for commissioning according to chapter 3.1 of the operating instructions 2. Connect the sensor to the measuring/control unit 3. Carefully place the sensor in a beaker with clean tap water (no disinfectant!) 4. Stir the sensor in the beaker for approx. 30 seconds (without creating air bubbles) 5. Let the sensor stand still in the beaker and wait until the run-in time has passed (at least 1 hour) 6. Read the original sensor signal from the measuring/control unit or measure it with a digital multimeter 7. The sensor signal should approach zero -> If the sensor signal approaches zero, the zero point is likely to be OK. -> If the measured value deviates significantly from zero, the sensor must be serviced in accordance with chapter 6.2 of the operating instructions and the "Zero point test" repeated It has to be taken into account that a freshly cleaned working electrode (measuring electrode) has a relatively high zero point. The sensor then needs a few days to reach its lowest zero point again. -> If the measured value does not reach zero even after maintenance was carried out, the sensor must be sent in for inspection. ***NOTICE*** **For sensors with very small measuring ranges or high sensitivity, the zero points are in principle somewhat higher than for sensors with large measuring ranges or low sensitivity.**

Signal test	After zero point test: 1. Add some disinfectant containing chlorine to the beaker filled with clean tap water from the "zero point test" 2. Stir as evenly as possible for at least 5 minutes with the sensor connected to the measuring instrument 3. During this time, you should notice an increase in the measuring signal -> If the sensor signal increases, the sensor is likely to be OK. If the sensor does not react to the chlorine-containing disinfectant, the sensor must be serviced in accordance with chapter 6.2 of the operating instructions and the "Signal test" repeated. -> If the sensor still shows no reaction to the chlorine-containing disinfectant after that, it must be sent in for maintenance.
Environment test	1. Check flow 2. Check measuring cable 3. Check measuring/control unit 4. Check correct calibration 5. Check dosing device 6. Check concentration of disinfectant in the dosing tank 7. Check suitability of the sensor for measuring the dosed disinfectant 8. Check concentration of disinfectant in measuring medium (analytics) 9. Check pH value of the measuring medium 10. Check temperature of the measuring medium 11. Check pressure in the flow cell 12. Check analytics

6.4 Returns

Please observe the following instructions when returning items.

If returning a sensor, please contact customer service first. To ensure hassle-free returns and avoid incorrect deliveries, each return package must first be reported to the customer service. You will then receive a numbered RMA form, which you need to fill out completely, check and send back to us. Please attach the form with the number so it is clearly visible on the outside of the return package or write it in large numbers on the packaging. so that your return package can be correctly allocated and accepted.

Caution! Return shipments without an RMA number cannot be accepted and processed!

Please make sure that the sensor is cleaned and disinfected before shipping. In order to prevent damage to the goods during shipping, use the original packaging. If this is not available, make sure that safe transport is guaranteed and that the sensor is safely packed with enough packing material.

Should you require further information, please contact the TriOS customer service (see chapter 10).

7 Technical Data

7.1 Technical Specifications

Measurement technology	Membrane-covered, amperometric 2-electrode system	
Measurement principle	Amperometry	
Parameters	Chlorine Dioxide	
Measurement range	0...2 mg/L, 0...20 mg/L	
Accuracy	Measuring range 2 mg/L: at 0.4 mg/L & 1.6 mg/L < 1 % Measuring range 20 mg/L: at 1.5 mg/L < 0.1 %	
Response time	T90: approx. 1 min	
Running-in period	Approx. 2 h prior to initial operation	
Drift	Approx. -1% per month	
Temperature compensation	Automatic through integrated temperature sensor Pt100	
Housing material	Micro-porous hydrophilic membrane, UPVC, stainless steel 1.4571	
Dimensions (L x Ø)	Approx. 205 mm x approx. 25 mm	~ 8.1″x 1″
Interface	RS-485, Modbus RTU	
Power supply	9...30 VDC, max. 56 mA	
Connection	8-pin M12 plug	
Maintenance interval	typically once a week measuring signal check, membrane cap change & electrolyte change depending on application	
System compatibility	Modbus RTU	
Warranty	1 year (EU & US: 2 years) on electronics; wear parts are excluded from the warranty	
Process pressure	1 bar, no pressure shocks or vibrations, operation with retaining ring	~ 14.5 psig
Calibration method	Determination of chlorine with DPD-1 method	
Process temperature	0...+50 °C (no ice crystals in the test water)	~ +32 °F... +122 °F
Flow rate	Approx. 15..30 L/h in FLC-3, minimum flow dependence exists	
pH range	pH 1 ... pH 12, reduced pH dependence	
Conductivity	10 µS/cm...50 mS/cm (sea water)	
Cross influences	Cl2 does not interfere; O3: factor 25	

8 Accessories

8.1 Controller

The sensor can be connected to all TriOS controllers. Below you will find an overview of the available TriOS devices:

8.1.1 TriBox3

Digital, 4-channel display and control unit with integrated solenoid valve for compressed-air control

TriBox3 is a measurement and control system for all TriOS sensors. The device has 4 sensor channels with selectable RS-232 or RS-485 function. In addition to the Modbus RTU, various other protocols are available. A built-in valve allows the use of compressed-air cleaning for the sensors. The TriBox3 also offers TCP/IP and WLAN networks, USB connection and 6 analog outputs (4...20 mA). An integrated relay can trigger alarms or control external devices. Features such as low power consumption, a robust aluminium housing and a range of interfaces make it suitable for all applications that have to do with environmental monitoring, drinking water, wastewater treatment plants and many other areas.

Firmware 1.4.11 or higher.

8.1.2 TriBox mini

Digital 2-channel controller

Mini controller with two digital and serial sensor channels and two 4.....20mA outputs. All of the measured values and diagnostics data that are saved can be selected using an integrated web browser.

Firmware 1.2.0

9 Warranty

The warranty period of our devices within the EU and the United States is 2 years from the date of the invoice. Elsewhere the warranty period is one year. Excluded from the warranty are all normal consumables, such as membrane caps and electrolyte, and service work to be carried out (cleaning of parts that have come into contact with electrolyte gel, replacement of the reference electrode and cleaning of the electrode tip with fine sandpaper).

The warranty is subject to the following conditions:

- The device and all accessories must be installed as described in the corresponding manual and must be operated according to the specifications.
- Damage due to contact with corrosive and damaging substances, liquids or gases and damage during transport are not covered by the warranty.
- Damage due to improper handling and use of the device is not covered by the warranty.
- Damage resulting from modification or unprofessional attachment of accessories by the customer is not covered by the warranty.
- If the serial number is not legible, the warranty expires.

NOTICE	**Opening the electrode body voids the warranty!**

10 Customer service

If you are having a problem with the sensor, please contact TriOS customer service.

We recommend sending the sensor in for maintenance and calibration every 2 years. To do this, please request an RMA number from customer service.

Technical support contact:

support@trios.de

Telephone: +49 (0) 4402 69670 - 0

Fax: +49 (0) 4402 69670 – 20

For quick help, please send us the sensor ID number by e-mail.

11 Contact

We are constantly working to improve our devices. Visit our website for news and information.

If you have found an error or bug in one of the devices or programs, please let us know:

Customer service:	support@trios.de
General questions / sales:	sales@trios.de
Website:	www.trios.de

TriOS Mess- und Datentechnik GmbH

Bürgermeister-Brötje-Str. 25

D-26180 Rastede

Germany

Telephone	**+49 (0) 4402 69670 - 0**
Fax	**+49 (0) 4402 69670 - 20**

12 Keyword Index

A

Accessories 27

B

Baud rate 11

Biological safety 3

C

Care 16

CE certification 34

Certificates & approvals 5

Cleaning 16

Contact 30

Copyright 2

Customer calibration 14

Customer service 29

D

Declaration of conformity 34

Disposal 5

E

Electrical installation 10

Electrolyte 17

Electromagnetic waves 3

F

G

H

Health and safety information 3

I

Intended use 5

Interfaces 11

J

K

L

M

Manufacturer Calibration 14

Measurement 11

Measurement principle 7

Measurement properties 15

Membrane cap replacement 17

Mounting 13

N

O

Operating requirements 4

P

Product Identification 6

Q

R

Rating plate 6

Reagents 3

Retaining ring 13

Returns 25

RMA number 25

S

Safety instructions 3

Scope of Delivery 7

Specifications 26

Storage 18

Structure of the sensor 7

T

Technical Specifications 26

Troubleshooting 18

U

User requirements 4

V

W

Warnings 4

Warranty 28

Waste 3

X

Y

Z

Annex

CE Declaration of Conformity

Hersteller/Manufacturer/Fabricant: TriOS Mess- und Datentechnik GmbH
Bürgermeister-Brötje-Str. 25
D- 26180 Rastede

Konformitätserklärung
Declaration of Conformity
Déclaration de Conformité

Die TriOS GmbH bescheinigt die Konformität für das Produkt
The TriOS GmbH herewith declares conformity of the product
TriOS GmbH déclare la conformité du produit

Bezeichnung Product name Designation	**eCHEM Chlordioxid** **eCHEM Chlorine Dioxide**
Typ / Type / Type:	**Art. Nr. 90S220000**
Mit den folgenden Bestimmungen With applicable regulations Avec les directives suivantes	2014/30/EU EMV-Richtlinie 2015/868/EU RoHS3
Angewendete harmonisierte Normen Harmonized standards applied Normes harmonisées utilisées	EN 61326-1:2013 EN 61326-2-3:2013 EN 50581:2012

Datum / Date / Date

30.10.2018

Unterschrift / Signature / Signatur

R. Heuermann

D05-915yy201810

Modbus RTU

Modbus sensor short data	Electrochemical sensor with digital signal processing and Modbus RTU interface.
Power supply	• 9...30 VDC, max. 56 mA
Pin assignment	8-pin screw connector, M12, reverse polarity protection • 1 RS485 A • 2 RS485 B • 5 reserved • 7 GND • 8 +9...+30 V There are no terminating resistors in the sensor!
Galvanic isolation	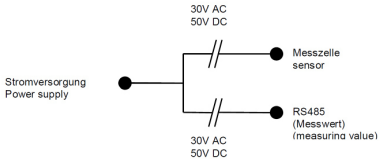
MODBUS parameters	RTU mode • MODBUS ID: 70 • 9600 baud • No Parity • 1 Stop-bit

Modbus functions

Code	Function
0x03	Read Holding Registers [16bit]
0x04	Read Input Registers [16bit]
0x06	Write Single Registers
0x10	Write Multiple Registers

Device data

Address	Access	Data type	Parameters	Example
0x03	R / O	char [16]	Sensor type	CLO_2_122
0x04	R / O	Int	Hardware	1120 (1.120)
0x06	R / O	Int	Firmware	1202 (1.202)

Device data

Address	Access	Data type	Parameters	Value range		Default
0x0400	R / W	int	slave-address	1 … 247		70
0x0401	R / W	int	baud rate	0	2400	2
				1	4800	
				2	9.600	
0x0402	R / W	int	parity/stop	0	none/2	3
				1	even	
				2	odd	
				3	none/1	

Process data parameters

Address	Access	Data type	Parameters	Value range		Default
0x0200	R / O	int	Unit	0	%	
				1	‰	
				2	g/L	
				3	ppm	3
				4	mg/L	
				5	ppb	
				6	µg/l	
0x0201	R / O	int	Measurement range	0	0000	
				1	000.0	
				2	00.00	
				3	0.000	3
0x0206	R / W	float	X_Null			
0x0208	R / W	float	X_Span			
0x020a	R / W	unsigned longint	DateTime	yymmddhhmm		
History						
0x0210	R / O	float	X_Null [0]			
0x0212	R / O	float	X_Span [0]			
0x0214	R / O	unsigned longint	DateTime [0]	yymmddhhmm		
0x0216	R / O	float	X_Null [1]			
0x0218	R / O	float	X_Span [1]			
0x021a	R / O	unsigned longint	DateTime [1]	yymmddhhmm		
0x021c	R / O	float	X_Null [2]			
0x021e	R / O	float	X_Span [2]			
0x0220	R / O	unsigned longint	DateTime [2]	yymmddhhmm		

0x0222	R / O	float	X_Null [3]			
0x0224	R / O	float	X_Span [3]			
0x0226	R / O	unsigned longint	DateTime [3]	yymmddhhmm		
0x0228	R / O	float	X_Null [4]			
0x022a	R / O	float	X_Span [4]			
0x022c	R / O	unsigned longint	DateTime [4]	yymmddhhmm		
0x022e	R / O	float	Measurement range			20

Process data measured values

Address	Access	Data type	Parameters	Value range	Default
0x0000	R / O	float	Concentration /ppm		
0x0002	R / O	float	Cell current /nA (@25°C)		
0x0004	R / O	float	Temperature		

Calibration	The values for the zero point (X_Null), slope (X_Span) and then the date and time are written to the sensor. The sensor electronics accepts the new calibration data if the date stamp is sent within approx. 5 seconds following the values. If the date differs from that of the last calibration, the new values are stored in the history memory and the oldest values are overwritten.
Date / Time stamp	• Data type: unsigned long • 2^{32} = 4294967296 • Year: (20)42, Month: [94], Day: [96], Hour: [72], Min: [96] • Last possible date: 31.12.2042, 23:59

(Subject to technical changes!)