TriOS xylem

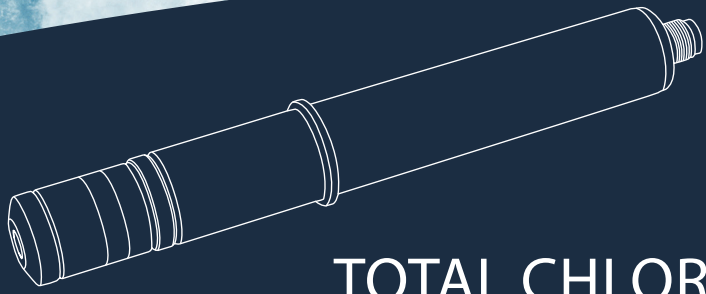

TOTAL CHLORINE

OPERATING INSTRUCTIONS

Table of Contents

1 General Information 2

1.1 Introduction 2

1.2 Health and safety information 3

1.3 Warnings 4

1.4 Users and Operating Requirements 4

1.5 Intended use 5

1.6 Disposal Information 5

1.7 Certificates and Approvals 5

2 Introduction 6

2.1 Product Identification 6

2.2 Scope of Delivery 7

2.3 Measurement Principle and Design 8

2.3.1 Measurement properties 9

3 Commissioning 10

3.1 Preparation of the Sensor 10

3.2 Electrical installation 12

3.3 Interfaces 13

4 Use 14

4.1 Mounting in the flow cell 15

5 Calibration 17

5.1 Manufacturer Calibration 17

5.2 Customer calibration 17

6 Malfunction and Maintenance 18

6.1 Cleaning and Upkeep 18

6.2 Maintenance and inspection 18

6.2.1 Electrolyte Replacement 19

6.2.2 Membrane cap replacement 19

6.2.3 Sensor Check 20

6.3 Troubleshooting 20

6.3.1 General Troubleshooting 21

6.3.2 Special Troubleshooting on the Sensor 23

6.4 Returns 25

7 Technical Data 26

7.1 Technical Specifications 26

8 Accessories 28

8.1 TriBox3 28

8.2 TriBox mini 28

8.3 Flow Cell 28

9 Warranty 29

10 Customer Service 30

11 Contact 31

12 Keyword Index 32

Annex 34

1 General Information

1.1 Introduction

Welcome to TriOS.

We are glad that you have chosen to purchase our total chlorine sensor.

The sensor from the eCHEM sensor product range is an electrochemical sensor for measuring the chlorine concentration in water. The sensor measures the concentration of total chlorine in a sample created by adding inorganic chlorine products (e.g. chlorine gas, sodium hypochlorite solution, calicium hypochlorite solution). The measuring method has a reduced pH dependency, so that pH value fluctuations only have a minor influence on the measuring signal. By regularly replacing the electrolyte and the membrane cap, the sensor performance can be guaranteed and ensured over a longer period of time.

In this manual, you will primarily only find information you will need to commission the eCHEM chlorine sensor. Technical specifications can be found in chapter 7. The corresponding operating instructions of the peripheral devices must be observed!

Please note that the user is responsible to comply with local and state regulations for the installation of electronic equipment. Any damage caused by incorrect use or unprofessional installation will not be covered by the warranty. All sensors and accessories supplied by TriOS Mess- und Datentechnik GmbH must be installed and operated in accordance with the specifications provided by TriOS Mess- und Datentechnik GmbH. All parts were designed and tested in accordance with international standards on electronic instruments. The device meets the requirements of the international standards on electromagnetic compatibility. Please use only original TriOS accessories and cables to ensure reliable and correct operation of the devices.

Before using the device, read the manual carefully, and keep this manual on hand for future reference. Before commissioning the sensor, please make sure that you have read and understood the following safety precautions. Always make sure that the sensor is operated correctly. The safety precautions described on the following pages should ensure the reliable and correct operation of this device and any additional associated devices and should prevent injuries to yourself or other persons and damage to other equipment.

NOTICE	**If the translation is at all different from the original German text, the German version is binding.**

Copyright Notice

All of the content in this manual, including texts, photographs and graphics, are protected by copyright. Unless expressly stated otherwise, TriOS Mess- und Datentechnik GmbH is the owner of the copyright. Persons who violate the copyright shall be liable pursuant to § 106 et seq of the copyright law, they will be warned at their own expense and must pay compensation.

1.2 Health and safety information

This manual contains important information about health and safety rules. This information is labelled according to the international specifications of ANSI Z5356 („Product safety information in product manuals, instructions and other collateral materials“) and must be strictly followed. The following are distinct categories:

⚠ **DANGER**	**Danger warning / will lead to serious injury or death**
⚠ **WARNING**	**Warning / may lead to serious injury or death**
⚠ **CAUTION**	**Caution / may cause moderate injury**
NOTICE	**Can result in damage to property**

Tip / Useful Information

Electromagnetic waves

Devices that radiate strong electromagnetic waves can influence the measurement data or result in a malfunction of the sensor. Avoid using the following devices in the same room as the TriOS sensor: mobile phones, cordless phones, transmitters/receivers and other electrical devices that produce electromagnetic waves.

Reagents

Follow the safety and operating instructions of the manufacturer when using reagents. Observe the valid Hazardous Materials Ordinance for reagents (German GefStoffV)!

Biological safety

Liquid waste may be a biohazard. Therefore, you should always wear gloves when working with such materials. Please observe the currently valid biological agents regulation! (German BioStoffV)

Waste

When handling liquid waste, observe the regulations on water pollution, drainage and waste disposal.

1.3 Warnings

- The sensor should only be used in drinking water, swimming pool water or sea water, other water qualities should be tested.
- Any other use is considered improper. In the event of improper use, all warranty claims are void and liability is excluded.
- The sensor may only be used to determine and control the concentration of chlorine.
- The sensor is not suitable for checking the absence of chlorine.
- The material resistance should be tested for each application.
- Do not cut, damage or change the cable. Make sure that no heavy objects are placed on the cable and that the cable is not kinked. Make sure that the cable is not run near hot surfaces.
- Do not place any unsuitable objects near the measuring head as long as the measurement process is running, as this can cause damage to the membrane or incorrect measurement results.
- Stop operation of the sensor in the event of excessive heat development (i.e. if it is hot to the touch). Switch off the sensor immediately and unplug the cable from the power supply. Please contact your dealer or the TriOS customer service.
- Never try to disassemble or modify the electrode body of the sensor if such a procedure is not explicitly described in this manual. Inspections, modifications and repairs may only be carried out by the dealer or by qualified experts authorized by TriOS.
- If the associated cable is damaged, it must be replaced with an original part by the customer service of TriOS GmbH.
- When installing the sensor outside Germany, the relevant national regulations must be observed.
- No liability is assumed for personal injury or damage to property resulting from non-observance of these operating instructions, modification of the sensor or its improper use.

Devices from TriOS Mess- und Datentechnik GmbH meet the highest safety standards. Repairs to the device (which involve the replacement of the connecting cable) must be carried out by TriOS Mess- und Datentechnik GmbH or by a workshop authorized by TriOS. Defective, improper repairs can lead to accidents and injuries.

NOTICE	**TriOS does not guarantee the plausibility of the measured values. The user is always responsible for the monitoring and interpretation of the measured values.**

1.4 User and Operating Requirements

The chlorine sensor has been developed for use in industry and science. The implementation of chlorine determination with test kits often requires the handling of hazardous substances.

We assume that the operating personnel are familiar with dealing with dangerous substances based on their professional training and experience. The operating personnel must be able to correctly understand and implement the safety labels and information on the packaging and in the package inserts of the test kits.

1.5 Intended use

The purpose of the eCHEM total chlorine sensor is exclusively to measure the concentration of chlorine as described in this manual. In this respect, the chlorine sensor can only be operated with a flow cell. Please note the technical data of the accessory parts. Other uses do not comply with the intended use.

This device has been developed for use in research and industry. It may only be used for the measurement of free and combined chlorine in aqueous fluids such as drinking water, swimming pool water or sea water. The use of other media can damage the sensor. For the use of the chlorine sensor in other media than those specified in this manual, please contact the customer service of TriOS Mess- und Datentechnik GmbH (support@trios. de).

NOTICE	Avoid any contact with the membrane that could scratch or dirty it. This would no longer guarantee the functionality of the device.

According to current scientific knowledge, the device is safe to use when it is handled according to the instructions in this user manual.

1.6 Disposal Information

At the end of the device's life or use, the device and its accessories can be returned for environmentally friendly disposal for a fee (see addressbelow). The preceding professional decontamination of the device must be proven with a certificate. Please contact us for more details before you send the device back.

Address of the dealer:

TriOS Mess- und Datentechnik GmbH
Bürgermeister-Brötje-Str. 25
D-26180 Rastede
Germany

Telephone: +49 (0) 4402 69670 - 0

Fax: +49 (0) 4402 69670 – 20

1.7 Certificates and Approvals

This product meets all of the requirements of the harmonised European standards. It therefore meets the legal requirements of the EU guidelines. TriOS Mess- und Datentechnik GmbH confirms the successful testing of the product by affixing the CE marking. (See Annex.)

2 Introduction

The total chlorine sensor uses a 3-electrode system to measure chlorine dissolved in water. Both free chlorine (chlorine gas, hypochlorite, etc.) and combined chlorine (chloramines) are measured. It is often used in sewage treatment plants to monitor the effluent water or to control the reuse of the water. The sensor has an increased pH independence and is therefore almost stable even with small changes in the pH value.

By regularly replacing the electrolyte and the membrane cap, the sensor performance can be guaranteed and ensured over a longer period of time.

2.1 Product Identification

All TriOS Mess- und Datentechnik GmbH products have a label, which clearly shows the product designation.

There is also a rating plate on the sensor with the following information that you can use to uniquely identify the product:

Serial number

Product type

Power supply

Interface

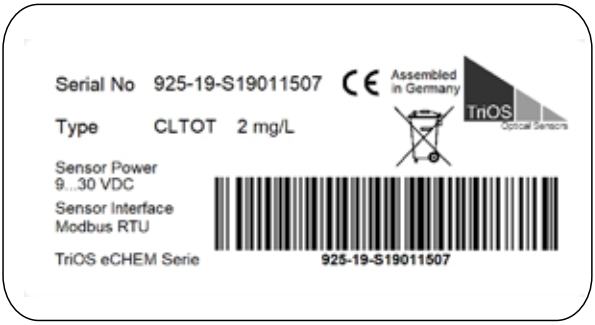

In addition to the product bar code, the rating plate includes the TriOS Mess- und Datentechnik GmbH logo and the CE quality label.

Please note that the specifications given here are for illustration purposes only and may be different depending on the version of the product.

2.2 Scope of Delivery

The shipment contains the following components:

1. - Sensor with membrane cap M48.4E
2. - 100 ml gel electrolyte ECS2.1/GEL
3. - Fine sandpaper S1
4. - Operating instructions

5. Keep the original packaging of the device in case it needs to be returned for repairs.

2.3 Measurement Principle and Design

The chlorine sensor is a membrane-covered potentiostatic 3-electrode measuring cell with a specially arranged counter electrode. The measuring electrode is covered by a membrane and, together with the reference electrode, is located in an electrolyte chamber which is separated from the sample water and contains a special electrolyte.

With this patented measuring method, chlorine diffuses from the sample water through the membrane and triggers an electrical signal in connection with the electrolyte at the measuring electrode. This electrical signal is proportional to the chlorine concentration and is amplified by the sensor electronics. Due to an integrated temperature compensation, the measuring signal is independent of the temperature of the sample water.

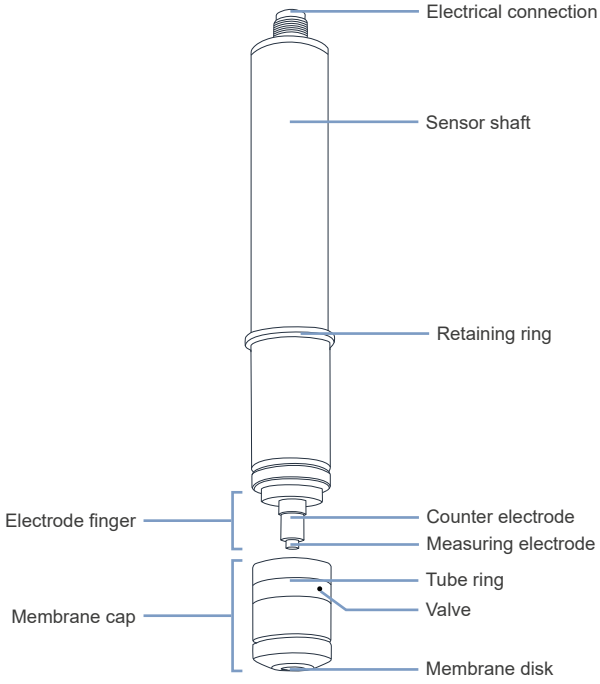

2.3.1 Measuring properties

The following instructions must be observed when operating the sensor:

- The sensor must be operated in a vertical position so that the flow is from below against the membrane.
- Outgassing sample water interferes with the measurement. In unpressurized operation with the sample water flowing freely, gas bubbles do not interfere as long as they do not cover the membrane. Gas bubbles in front of the membrane prevent the chlorine from entering the electrolyte, which distorts the measurement signal.
- A minimum flow rate (>15 L/h) is required. The flow rate must be constant.
- The service life of the membrane is typically 1 year, but is highly dependent on the water quality. Avoid heavy soiling of the membrane!
- The supply voltage to the sensor must not be switched off during intermittent operation of the measuring system. The sensor must be permanently connected to the supply voltage. The sensor must not be allowed to dry out.
- The sensor must not be operated in chlorine-free water for long periods (>1 day). There is a risk of deposits/contamination (e.g. biological) forming on the membrane, which may hinder or block subsequent chlorine measurement. After operating the sensor in chlorine-free water, run-in times must be expected. Switch on dosing with a time delay if necessary. If no chlorine is dosed for a longer period of time, the sensor must be disconnected from the controller, removed and stored in a dry place.
- The presence of reducing and oxidizing agents as well as corrosion inhibitors can interfere with the measurement.

3 Commissioning

This chapter deals with the commissioning of the chlorine sensor. Please pay particular attention to this section and follow the safety precautions to protect the sensor from damage and yourself from injury.

Before the sensor is finally put into operation, it must be ensured that it is securely attached and that all connections are correctly made.

3.1 Preparation of the Sensor for Commissioning

Before commissioning, the membrane cap must first be filled with the gel electrolyte. A few aspects should be taken into account and the following steps carried out:

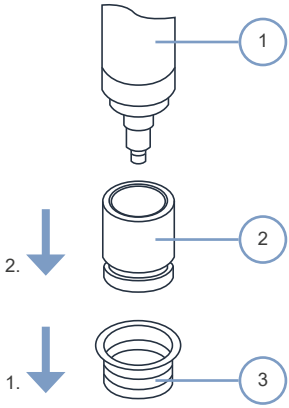

Remove the transparent protective cap [3] from the membrane cap [2].

Unscrew the membrane cap [2] from the electrode shaft [1].

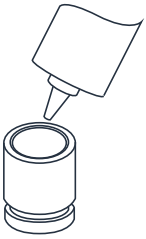

Place the membrane cap on a clean surface. Fill the membrane cap with the enclosed electrolyte bubble-free up to the edge.

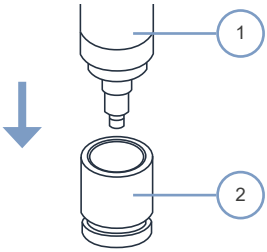

Place the vertically held electrode shaft [1] on the filled membrane cap [2], slowly screw the electrode shaft (by hand) into the membrane cap. The electrode finger can be cleaned with the enclosed sandpaper (this step is not necessary with a new sensor). To do this, place the sandpaper on a paper towel, hold it by the corner and run the electrode tip over the sandpaper two or three times while holding the sensor vertically.

Then slowly screw the sensor body into the membrane cap. Excess electrolyte escapes through the valve on the membrane cap, which is why the valve must not be kept closed.

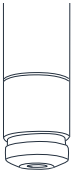

Rinse off any electrolyte residue adhering to the outside of the sensor with tap water.

The sensor is ready for commissioning.

NOTICE	**Make sure that the membrane cap is screwed onto the sensor body as far as it will go. Do not touch or knock the membrane!**

3.2 Electrical installation

The chlorine sensor is equipped with an 8-pin M12 screw connector for electrical commissioning. The following figure shows the pin assignment of the connector:

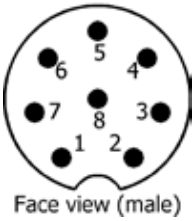

1. RS-485 A (commands)
2. RS-485 B (data)
3. not assigned
4. not assigned
5. not assigned
6. not assigned
7. Ground (Power + Ser. interface)
8. Power (9...30 VDC)

Insert the connector into one of the supplied TriOS cables (2 m). Connect the male end of the cable into the connector on the sensor by making the pins align with the slots of the cable. The next step is to turn the locking sleeve clockwise to secure the end of the connector.

The sensor may only be operated with the specified supply voltage.

Make sure that the supply voltage of the controller is constant! A supply voltage that is too low causes an incorrect measured value and can lead to dangerous over-metering in a control loop. The sensors must be operated potential-free. There must be no current flow between the sensors and the measuring medium. Measuring and control devices must therefore have galvanic isolation.

NOTICE	**Ensure that the polarity of the supply voltage is correct, otherwise the sensor may be damaged.**

3.3 Interface

The serial interface of the sensor is RS-485.

The interface must be configured as follows:

- Baud rate: 9600 bps
- Data bits: 8
- Stop bits: 1
- Parity: none
- Flow control: none

With RS-485, voltages from -5 V to +5 V to ground are possible. RS-485 uses a differential signal, whereby the sign-negated potential of the A line is applied to the B line. The decisive factor is the difference A-B, which makes the transmission as robust as possible against interference signals. The protocol used is Modbus RTU.

A detailed description of the Modbus RTU protocol for this sensor can be found in the appendix.

General Information
Introduction
Commis-sioning
Use
Calibration
Malfunction & Maintenance
Technical Data
Accessories
Warranty
Customer Service
Contact
Keyword Index
FAQ

4 Use

The chlorine sensor can be operated with all TriOS controllers. Instructions for correct installation can be found in the relevant controller manual.

A bypass installation of the sensor is essential for correct results. Therefore we strongly recommend to use the sensor in the flow cell type FLC for permanent use.

NOTICE	**The use of the sensor without flow cell is not recommended and can lead to loss of warranty.**

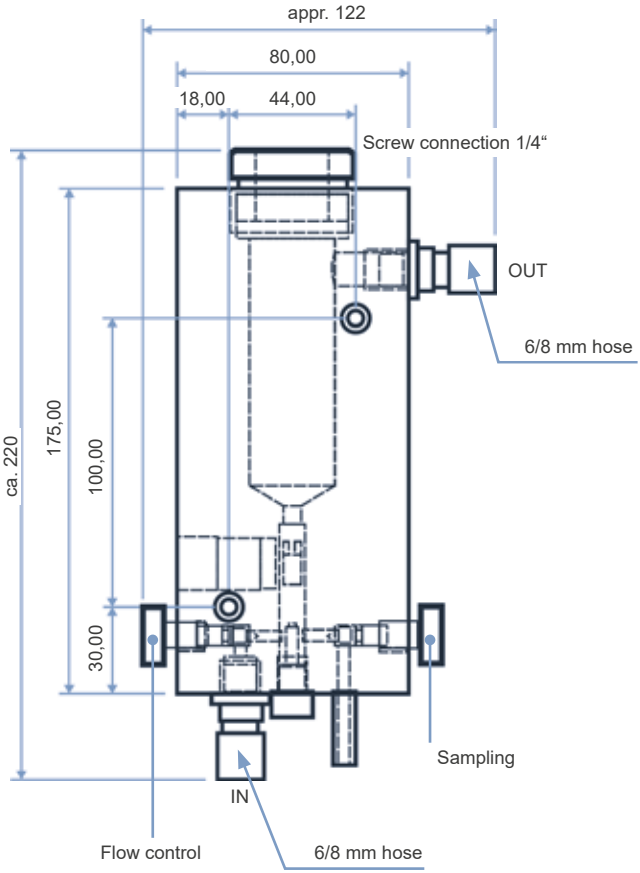

Dimensions in mm

NOTICE	**A sudden failure of the sensor can lead to dangerous over-metering. Take appropriate precautions in this case! Check system for odour, check water for abnormal discolouration. In case of strong over-metering, the DPD-1 measurement can remain colourless because the dye is bleached by the chlorine present.**

4.1 Mounting in the flow cell

Before installing the sensor in the flow cell type FLC, the system must be depressurized. Close the shut-off valves upstream and downstream of the flow-through fitting. Push the sensor slowly into the flow-through fitting. The sensor must not be pushed against the bottom of the fitting.

The following is a step-by-step description of installation in the flow cell:

1. To install the sensor in the flow cell, you must first remove the screw connections on the flow cell FLC.
2. Push the slide ring from the FLC under the retaining ring of the sensor.
3. Push the 25x2.5 O-ring (silicone) underneath the slidw ring over the sensor (see figure).
4. Make sure that the sensor is prepared as described in chapter 3. Make sure that the 30x2.6 O-ring (Viton) is still in the flow cell at the insertion edge.
5. Now slowly insert the prepared sensor into the flow cell as shown in the figure.
6. Carefully slide the screw connection over the sensor and screw it tight, otherwise leaks may occur!
7. Open the sample water drain.
8. Slowly open the sample water inlet.

Avoid installations where air bubbles can form in the sample water.

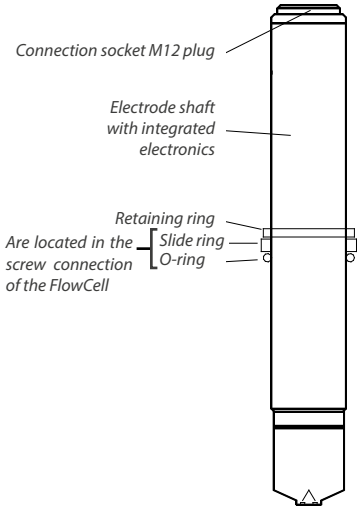

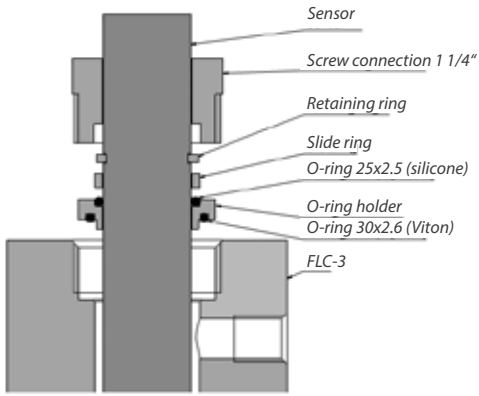

Operating mode	Flow-through fitting	Max. operating pressure	Max. operating temperature	Flow rate L/h
Sensor operation **with** retaining ring	FLC	1,0 bar (10 mH2O)	50 °C	15-30 L/h

IMPORTANT	Observe and adhere to the max. permitted operating pressure/temperature of the sensor!

4.2 Storage

When storing the total chlorine sensor, care must be taken to ensure that the electrolyte is completely removed first. To do this, proceed as follows:

1. Unscrew the membrane cap.
2. Rinse the electrolyte out of the membrane cap with lukewarm tap water for 10 seconds..

NOTICE	**Important: The electrolyte gel must be completely removed. Otherwise, a long run-in/response time must be expected when restarting.**

3. Rinse the electrode finger with lukewarm tap water.
4. Dry the membrane cap and the sensor body in a dust-free place.
5. Loosely screw the dry membrane cap onto the sensor body for protection and ensure that the membrane is not in contact with the working electrode.

When recommissioning, clean the electrode tip with the special sandpaper and use a new membrane cap (see point 6.2.2).

Used membrane caps that have already been in operation cannot be stored and then reused.

5 Calibration

5.1 Manufacturer Calibration

No manufacturer calibration is performed due to application-related changes in measured values (pH, inflow velocity, etc.). The sensors are only tested under standard conditions (concentration, pH, inflow velocity etc.) in an endurance test.

5.2 Customer calibration

The installation and other conditions must match the final application. The following points should also be observed before calibration:

- The flow rate is constant.
- The temperature of the sample water is constant.
- The temperature adjustment of the sensor to the sample water temperature is complete (approx. 20 minutes after temperature change).
- The sensor has run in.
- No other oxidizing agent is present in the sample water.
- The pH value is constant.

Calibration is conducted as follows

1. Take a water sample for analysis close to the sensor.
2. Determine the concentration of total chlorine in the sample water using a suitable analytical measuring method (a possible analytical measuring method would be the DPD-4 method)
3. Operation with a TriOS controller is recommended. An integrated wizard guides you step by step through a calibration menu. The analytically determined value is set as the reference value in the controller.

It is recommended to check the measured value once a week.

Please note the following explanations for direct Modbus access:

Calibration

The values for zero point (X_Null), slope (X_Span) and then date and time are written to the sensor. The sensor electronics accepts the new calibration data if the date stamp is sent within approx. 5 seconds following the values. If the date differs from that of the last calibration, the new values are stored in the history memory and the oldest values are overwritten.

Date / Time stamp

- Data type: unsigned long
- 232 = 4294967296
- Year: (20)42, Month: [94], Day [96], Hour [72], Min: [96]
- Last possible date: 31.12.2042, 23:59

6 Malfunction and Maintenance

To ensure error-free and reliable measurement, the total chlorine sensor should be cleaned and serviced at regular intervals. When carrying out maintenance and in the event of a malfunction, the entire system from the extraction point to the drain must always be taken into account. The system usually consists of:

- Total chlorine sensor
- Electrical wiring and connections
- Flow-through fittings and connections
- Measuring and / or control device
- Dosing device
- Analysis kit

Before removing the sensor, downstream controllers should be switched off or switched to manual operation. If the sensor is removed, an incorrect measured value may occur at the input of the controller and lead to uncontrolled dosing in a control loop. To perform maintenance tasks, shut off the sample water inlet and outlet. Remove the electrical connection.

6.1 Cleaning and Upkeep

To ensure a long service life of the total chlorine sensor, it should be checked regularly for contamination. Carefully rinse off any soiling on the outside with water. In case of heavy soiling it is recommended to change the electrolyte and/or the membrane cap. A detailed description on how to change the electrolyte and the membrane cap is given in the following chapter 6.2.

If you have further questions on this topic, we would be pleased to help you. Please contact our customer service at support@trios.de.

6.2 Maintenance and inspection

The sensor should be checked regularly for contamination, fouling and bubbles on the outside of the membrane. Avoid contamination of the membrane with particles, condensation etc. as far as possible. Bubbles on the outside of the membrane can be eliminated by briefly increasing the flow rate.

After a membrane cap or electrolyte change, a slope adjustment must be carried out.

NOTICE	**The coating of the electrode finger must not be sanded down. Do not unscrew the membrane disc holder from the membrane cap, as the membrane may be damaged and the adjustment may be lost!**

The use of warm water is recommended for rinsing off the gel electrolyte residues on the electrode finger and in the membrane cap.

6.2.1 Electrolyte Replacement

It is recommended to replace the electrolyte once a year or when an adjustment is no longer possible due to readings that are unstable or too low.

Please proceed as follows:

1. Unscrew the membrane cap.
2. Empty the gel electrolyte from the membrane cap.
3. Rinse the electrode finger with tap water.
4. Shake the sensor body dry several times so that the pressure compensation opening [1] is emptied (see fig.)

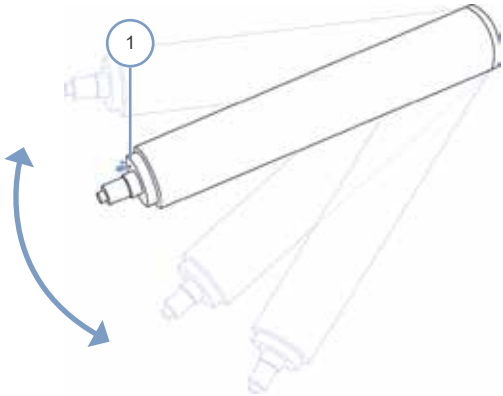

5. Place the special sandpaper on a paper towel.
6. Hold the sensor vertically.
7. Hold the special sandpaper firmly and run the tip of the working electrode over it at least twice. Use a new area of sandpaper each time (see illustration).

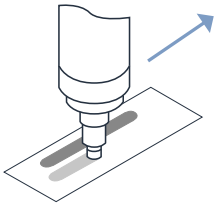

6.2.2 Membrane cap replacement

It is recommended to replace the membrane cap once a year or when an adjustment is no longer possible due to readings that are unstable or too low.

To replace the membrane cap, please follow the commissioning steps (see chapter 3.1).

6.2.3 Sensor Check

An adjustment or a check of the sensor according to the DPD-1 method ("free chlorine") should be carried out regularly at specific intervals, depending on the requirements.

Recommendation: Weekly control, if necessary more frequently.

It is recommended to replace the electrolyte once a year.

Sensors with digital internal signal processing

The mounting of the socket on the sensor is transparent. Two light emitting diodes (green and orange) are visible:

Green LED	Continuous light: Power supply is correct. Program in the processor is running. Flickering or no light: Indicates low voltage and resulting processor malfunction.
Orange LED	No light: (all correct) Sensor signal has the right polarity. Continuous light: indicates wrong polarity of the sensor signal. Multiply the displayed output signal by -1. Regular flashing: The chlorine sensor is overloaded. Cause: Chlorine concentrations too high. (Due to the different sensitivities/slopes of the chlorine sensors, an overdrive may occur even if the maximum measuring range is not reached yet.)

6.3 Troubleshooting

For a targeted error analysis, the entire system from the extraction point to the drain must always be taken into account. The system usually consists of:

- Sensor
- Electrical wiring and connections
- Flow-through fittings and connections
- Measuring and / or control device
- Dosing device
- Analysis kit

In most cases, a faulty measurement is corrected by cleaning the electrode, replacing the electrolyte or changing the membrane cap. In the case of electronic faults, there is no possibility of repairing the electrode body adequately on site. The chlorine sensor must be sent back to the manufacturer for troubleshooting. When returning a sensor, always follow the procedure described in chapter 6.4, including provision of the RMA number.

In the following, detailed troubleshooting instructions are given, which are intended to enable a clear assessment of the fault and to provide appropriate guidance. A distinction is made between general troubleshooting (chapter 6.3.1) and special troubleshooting on the sensor (chapter 6.3.2).

6.3.1 General Troubleshooting

Fault	Possible cause	Action
Sensor cannot be calibrated / measured value deviates from DPD measurement	Gas bubbles in the electrolyte	Unscrew the membrane cap and empty the electrolyte. Repeat commissioning.
	Run-in time too short	Repeat calibration after a few hours
	Membrane cracked	Replace membrane cap (see chapter 6.2.2)
	Membrane cap damaged	Replace membrane cap (see chapter 6.2.2)
	Interfering substances in the water	Examine water for interfering substances and remedy, consult the supplier if necessary
	Short-circuit / defect in the measuring line	Locate and eliminate short-circuit / defect, replace measuring line if necessary
	Distance between membrane and electrode is too great	Screw on the membrane cap completely as far as it will go
	DPD chemicals too old	Use new DPD chemicals and repeat calibration
	Deposits on the membrane	Replace membrane cap (see chapter 6.2.2)
	Gas bubbles on the outside of the membrane	Briefly increase the flow rate, check and change the installation if necessary
	Sensor defective	Send in sensor to be checked / overhauled
	Missing galvanic isolation	Establish galvanic isolation. Send in sensor to the supplier to be checked / overhauled.
	No electrolyte in the membrane cap	Fill the membrane cap with electrolyte (see chapter 6.2.1)
	Chlorine content exceeds upper measuring range limit	Check system, remedy fault, repeat calibration

Fault	Possible cause	Action
Unstable measuring signal	Membrane cracked	Replace membrane cap (see chapter 6.2.2)
	Bubbles in the electrolyte (especially during operation under pressure)	Empty the membrane cap and fill with new electrolyte bubble free (see chapter 6.2.1)
	Gas bubbles on the outside of the membrane	Briefly increase the flow rate, check and change the installation if necessary
	Pressure fluctuations in the measuring medium	Check installation type and change if necessary
	Reference electrode exhausted and/or contaminated	Send in sensor to be overhauled
	Missing galvanic isolation	Establish galvanic isolation. Send in sensor to the supplier to be checked / overhauled.
Overdrive (orange LED flashing regularly)	Too high concentration of disinfectant in the sample water	Check system Rectify fault Calibrate sensor (see chapter 5) Service sensor (see chapter 6.2)
	The run-in time is too short.	Wait until the run-in time has passed (see chapter 7)
	The membrane is damaged.	Replace membrane cap (see chapter 6.2.2)
	Too high inflow	Check system and reduce flow rate
	Missing galvanic isolation	Establish galvanic isolation and, if necessary, send in sensor to the supplier to be checked / overhauled
	The sensor is defective.	Send in sensor to the supplier to be checked / overhauled.
Underdrive	The run-in time is too short.	Wait until the run-in time has passed (see chapter 7)
	The working electrode is contaminated.	Service the sensor (see chapter 6.2)
	Missing galvanic isolation	Establish galvanic isolation and, if necessary, send in sensor to the supplier to be checked / overhauled
	The sensor is defective.	Send in sensor to be checked / overhauled
No signal	The measuring line is interrupted.	Replace the measuring line.
	The sensor is not supplied with power.	Establish correct power supply.
	The sensor is defective.	Send in sensor to the supplier to be checked / overhauled.

Only applies to sensors with digital internal signal processing:

Fault	Possible cause	Action
Green LED Flickering or no light	Too low voltage -> faulty power supply	Establish correct power supply
	Sensor defective	Send in sensor to be checked / overhauled
Orange LED Continuous light	Incorrect polarity of the sensor signal -> displayed output signal must be multiplied by -1	Service the sensor according to chapter 6.2 or send in sensor to be checked / overhauled
	Underdrive	See chapter 6.3.1, section Underdrive
Regular flashing	Sensor is overloaded -> chlorine concentration too high	Check system, rectify faults, calibrate or service sensor if necessary
	Overdrive	See chapter 6.3.1, section Overdrive

6.3.2 Special Troubleshooting on the Sensor

If the electrode finger turns shiny silver or white, the sensor must be overhauled by the manufacturer. Brown-grey discolourations are common.

Tightness test of membrane cap

1. Carefully dry the outside of the membrane cap to be tested
2. Prepare the membrane cap for installation according to the operating instructions and fill with electrolyte
3. If necessary, dry the membrane cap again on the outside
4. Screw the membrane cap slowly and carefully onto the sensor according to the operating instructions
5. When screwing on the membrane cap, check whether electrolyte gel escapes through the membrane

NOTICE **Carefully check whether the electrolyte is escaping through the membrane or if it is sealing properly at the intended points; repeat the tightness test if necessary.**

-> If a drop flow forms on the membrane, it is defective and a new membrane cap must be used. The formation of a small meniscus can be tolerated since the membrane is hydrophilic.

-> Check whether the reference electrode has been damaged by the exchange between measuring medium and electrolyte. If it is no longer in perfect condition, send in the sensor for inspection.

Electronics test (dry test)	1. Unscrew the membrane cap 2. Rinse electrode finger carefully, dry carefully with a clean cloth 3. Connect sensor to controller, wait for approx. 5 min 4. Read the original sensor signal from the controller Controller must display 0 ppb. -> If the sensor signal corresponds approximately to the above-mentioned value, the electronics are likely to be OK. -> If the measured value deviates significantly from the above-mentioned value, the sensor must be sent in for inspection.
Zero point test	After electronics test: 1. Prepare the sensor for commissioning according to chapter 3.1 of the operating instructions 2. Connect the sensor to the measuring/control unit 3. Carefully place the sensor in a beaker with clean tap water (no disinfectant!) 4. Stir the sensor in the beaker for approx. 30 seconds (without creating air bubbles) 5. Then let the sensor stand still in the beaker and wait until the run-in time has passed (at least 1 hour) 6. Read the original sensor signal from the measuring/control unit or measure it with a digital multimeter 7. The sensor signal should approach zero -> If the sensor signal approaches zero, the zero point is likely to be OK. -> If the measured value deviates significantly from zero, the sensor must be serviced in accordance with chapter 6.2 of the operating instructions and the "Zero point test" repeated It has to be taken into account that a freshly cleaned working electrode (measuring electrode) has a relatively high zero point. The sensor then needs a few days to reach its lowest zero point again. -> If the measured value does not reach zero even after maintenance was carried out, the sensor must be sent in for inspection. **NOTICE** **For sensors with very small measuring ranges or high sensitivity, the zero points are in principle somewhat higher than for sensors with large measuring ranges or low sensitivity.**

Signal test	After zero point test: 1. Add some disinfectant containing chlorine to the beaker filled with clean tap water from the "zero point test" 2. Stir as evenly as possible for at least 5 minutes with the sensor connected to the measuring instrument 3. During this time, you should notice an increase in the measuring signal -> If the sensor signal increases, the sensor is likely to be OK. If the sensor does not react to the chlorine-containing disinfectant, the sensor must be serviced in accordance with chapter 6.2 of the operating instructions and the "Signal test" repeated. -> If the sensor still shows no reaction to the chlorine-containing disinfectant after that, it must be sent in for inspection.
Environment test	1. Check flow 2. Check measuring cable 3. Check measuring/control unit 4. Check correct calibration 5. Check dosing device 6. Check concentration of disinfectant in the dosing tank 7. Check suitability of the sensor for measuring the dosed disinfectant 8. Check concentration of disinfectant in measuring medium (analytics) 9. Check pH value of the measuring medium 10. Check temperature of the measuring medium 11. Check pressure in the flow cell 12. Check analytics

6.4 Returns

Please observe the following instructions when returning items.

If returning a sensor, please contact customer service first. To ensure hassle-free returns and avoid incorrect deliveries, each return package must first be reported to the customer service. You will then receive a numbered RMA form, which you need to fill out completely, check and send back to us. Please attach the form with the number so it is clearly visible on the outside of the return package or write it in large numbers on the packaging. so that your return package can be correctly allocated and accepted.

Caution! Return shipments without an RMA number cannot be accepted and processed!

Please make sure that the sensor is cleaned and disinfected before shipping. In order to prevent damage to the goods during shipping, use the original packaging. If this is not available, make sure that safe transport is guaranteed and that the sensor is safely packed with enough packing material.

7 Technical Data

7.1 Technical Specfications

Applications	Swimming pools, drinking water, brine water, sea water (15 % NaCl) Surfactants are partially tolerated.
Measurement technology	Membrane-covered, amperometric potentiostatic 3-electrode system with integrated electronics
Measurement principle	Amperometry
Parameters	Total chlorine (= free chlorine + bonded chlorine) reduced pH dependency
Chlorination agents	Anorganic chlorine compounds: NaOCl (=chlorine bleach), $Ca(OCl)_2$, chlorine gas, electrolytically generated chlorine
Measurement range	0–2 mg/L, 0–20 mg/L
Accuracy	Measuring range 2 mg/L: at 0.4 mg/L <2 % at 1.6 mg/L <2 % Measuring range 20 mg/L: at 4 mg/L <1 % at 16 mg/L <3 % After calibration under repeatability conditions (25 °C, pH 7.2 in drinking water) from full scale
Resolution	Measuring range 2 mg/L: 0.001 mg/L Measuring range 20 mg/L: 0.01 mg/L
Response time	T_{90}: approx. 3 min. (brine water approx. 5 min.)
Running-in period	Approx. 2 hours for initial start-up
Drift	Approx. –1 % per month under repeatability conditions (25 °C, pH 7.2 in drinking water)
Temperature compensation	Automatically, by an integrated temperature sensor. Sudden temperature changes must be avoided
pH-range	pH4–pH12, reduced dependence on pH-value
Conductivity	10–200 µS/cm (brine)
Zero-point adjustment	Not necessary
Slope calibration	Directly with the sensor, by means of analytical chlorine determination, DPD-4-method (DPD-1 + DPD-3)

Cross interferences	ClO_2: factor 1; O_3: factor 1.3 Corrosion inhibitors can lead to measuring errors. Stabilizers for water hardness can lead to measuring errors.
Absence of disinfectant	Max. 24 h
Maintenance interval	Regular control of the measuring signal, min. once a week Depending on the water quality, it is recommended to exchange Membrane cap: once per year Elektrolyte: once per year
Interface	RS-485, Modbus RTU
Power supply	9–30 VDC; ~ 56–20 mA electronics are galvanically isolated completely; digital internal data processing
Connection	8-pol. M12-plug
Material	Microporous hydrophilic membrane, PVC-U, PEEK, stainless steel 1.4571
Dimension (L x Ø)	Approx. 205 mm x 25 mm
Storage	Sensor: dry and without electrolyte no limit at +5 °C to +40 °C Elektrolyte: in original bottle protected from sunlight at +5 °C to +35 °C min. 1 year or until the specified EXP-Date Membrane cap: in original packing no limit at+5 °C to +40 °C (used membrane caps cannot be stored)
Transport	+5 °C to +50 °C (sensor, elektrolyte, membrane cap)
Temperature	Measuring Water: 0 °C to +45 °C (no ice crystals in the measuring water) Ambient: 0 °C to +55 °C
Max. working pressure	Application with retaining ring: 3 bars, no pressure impulses and/or vibrations
Flow rate	Approx. 15–30 L/h in FlowCell
Warranty	1 year (EU/US: 2 years) on electronics; wear parts are excluded from warranty.

General Information
Introduction
Commis-sioning
Use
Calibration
Malfunction & Maintenance
Technical Data
Accessories
Warranty
Customer Service
Contact
Keyword Index
FAQ

8 Accessories

8.1 TriBox3

Digital, 4-channel display and control unit with integrated solenoid valve for compressed-air control

TriBox3 is a measurement and control system for all TriOS sensors. The device has 4 sensor channels with selectable RS-232 or RS-485 function. In addition to the Modbus RTU, various other protocols are available. A built-in valve allows the use of compressed-air cleaning for the sensors. The TriBox3 also offers TCP/IP and WLAN networks, USB connection and 6 analog outputs (4...20 mA). An integrated relay can trigger alarms or control external devices. Features such as low power consumption, a robust aluminium housing and a range of interfaces make it suitable for all applications that have to do with environmental monitoring, drinking water, wastewater treatment plants and many other areas.

Firmware-Version 1.5.4

8.2 TriBox mini

Digital 2-channel controller

Mini controller with two digital and serial sensor channels and two 4.....20mA outputs. All of the measured values and diagnostics data that are saved can be selected using an integrated web browser.

Firmware 1.2.4

8.3 Flow cells for chlorine sensors

The flow cell specially developed for the chlorine sensors is used for the bypass installation of the chlorine sensors. The flow cell provides optimum flow conditions for the best possible measurement function of the sensor.

9 Warranty

The warranty period of our devices within the EU and the United States is 2 years from the date of the invoice.. Elsewhere the warranty period is one year. Excluded from the warranty are all normal consumables, such as membrane caps and electrolyte, and service work to be carried out (cleaning of parts in contact with electrolyte, replacement of the reference electrode and cleaning of the electrode tip with fine sandpaper).

The warranty is subject to the following conditions:

- The device and all accessories must be installed as described in the corresponding manual and must be operated according to the specifications.
- Damage due to contact with corrosive and damaging substances, liquids or gases and damage during transport are not covered by the warranty.
- Damage due to improper handling and use of the device is not covered by the warranty.
- Damage resulting from modification or unprofessional attachment of accessories by the customer is not covered by the warranty.
- If the serial number is not legible, the warranty expires.

NOTICE	**Opening the electrode body voids the warranty!**

10 Customer Service

If you are having a problem with the sensor, please contact TriOS customer service.

We recommend sending the sensor in for maintenance and calibration every 2 years. To do this, please request an RMA number from customer service.

E-Mail:	support@trios.de
Telephone:	+49 (0) 4402 69670 - 0
Fax:	+49 (0) 4402 69670 - 20

For quick help, please send us the sensor ID number by e-mail.

11 Contact

We are constantly working to improve our devices. Visit our website for news and information.
If you have found an error or bug in one of the devices or programs, please let us know:

Customer service:	support@trios.de
General questions / sales:	sales@trios.de
Website:	www.trios.de

TriOS Mess- und Datentechnik GmbH
Bürgermeister-Brötje-Str. 25
D-26180 Rastede
Germany

Telephone	**+49 (0) 4402 69670 - 0**
Fax	**+49 (0) 4402 69670 - 20**

12 Keyword Index

A	
Accessories	28
B	
Baud rate	13
Biological safety	3
C	
CE certification	34
Certificates & approvals	5
Cleaning	18
Contact Us	31
Customer calibration	14
Customer Service	29
D	
Declaration of Conformity	34
E	
Electrical installation	12
Electrolyte	17
Electromagnetic waves	3
F	
G	
H	
Health and safety instructions	3
Intended use	5
Interfaces	11
K	
L	
M	
Maintenance	18
Manufacturer calibration	17
Measurement principle	7
Measurement properties	8
Membrane cap replacement	17
Mounting principle	15
N	
O	
Operating requirements	4

P	
Product identification	6
R	
Reagents	3
Return shipment	25
RMA number	25
S	
Safety instructions	3
Scope of delivery	7
Storage	18
Structure of the sensor	7
T	
Technical specifications	26
Troubleshooting	20
Type plate	6
U	
User requirements	4
V	
W	
Warnings	4
Warranty	29
Waste	3
Waste disposal	5
X	
Y	
Z	

Anhang

Declaration of Conformity

Hersteller/Manufacturer/Fabricant:	TriOS Mess- und Datentechnik GmbH Bürgermeister-Brötje-Str. 25 D- 26180 Rastede

Konformitätserklärung
Declaration of Conformity
Déclaration de Conformité

Die TriOS GmbH bescheinigt die Konformität für das Produkt
The TriOS GmbH herewith declares conformity of the product
TriOS GmbH déclare la conformité du produit

Bezeichnung Product name Designation	**eCHEM Gesamtchlor**
Typ / Type / Type	**90S230000** **90S330000**
Mit den folgenden Bestimmungen With applicable regulations Avec les directives suivantes	2014/30/EU EMV-Richtlinie 2011/65/EU RoHS-Richtlinie + (EU) 2015/863
Angewendete harmonisierte Normen Harmonized standards applied Normes harmonisées utilisées	EN 61326-1:2013 EN 61010-2-3:2013 EN IEC 63000:2018
Datum / Date / Date	Unterschrift / Signature / Signatur
11.02.2022	R. Heuermann

D05-925yy202203

Seite 1 von 1

Modbus RTU

Serial Interface

At delivery, the sensors serial interface is configured for RS-485 operation using the following setting:

- • Baud rate: 9600 bps
- • Data bits: 8
- • Stop bits: 1
- • Parity: none

Data types

Name	Register	Format
Bool	1	false: 0x0000, true: 0xFF00
Uint8	1	unsigned 8-bit integer. Value range: 0x0000 - 0x00FF
Uint16	1	unsigned 16-bit integer. Value range: 0x0000 - 0xFFFF
Uint32	2	unsigned 32-bit integer. Value range: 0x00000000 - 0xFFFFFFFF
Float	2	IEEE 754 32-bit floating-point value.
Char[n]	$\left[\frac{n}{2}\right]$	ASCII-Zeichenfolge mit n Zeichen.
Uint16[n]	n	Array mit n Uint16-Werten.
Float[n]	2n	Array mit n Float-Werten.

Funktions

These Modbus function codes are supported by the sensor:

Name	Code	Description / Use
Read multiple registers	0x03	Read the serial number and firmware version, configuration and calibration data, and of course measurement data.
Write multiple registers	0x10	Write configuration data.
Write single register	0x06	Trigger a measurement process

Default Slave Adress

At delivery, the sensors Modbus slave address is set to 65 (0x41).

Read / Write multiple registers (0x03 / 0x10)

The following table describes the Modbus register mapping:

Name	R/W	Register	Data type	Description
Total chlorine concentration	R	0	Float	Concentration of Total Chlorine in parameter unit specified in register 512 [default ppm], concentration is calculated as: (Actual current – X_Zero) / X_Span
Cell current	R	2	Float	Measured cell current in nA
Temperature	R	4	Float	Measured temperature in °C
Unit of the parameter	RW	512	Uint8	0 := % 1 := ‰ 2 := g/L **3 := ppm (default)** 4:= mg/L 5:= ppb 6:= µg/L
Decimal places	RW	513	Uint8	0 := 0000 1 := 000.0 2 := 00.00 **3 := 0.000 (default)**
X_Zero	RW	518	Float	Active Current, if no disinfectant is present in the me-dium to be measured [nA]
X_Span	RW	520	Float	Active Current value of the latest calibration in re-lation to the concentration of the disinfectant in the latest calibration [nA/unit]
DateTime	RW	522	Uint32	Date and time as yymmddhhmm of the active calibration. Example: Sept. 1st, 2021, 2:12 pm Decimal: 2109011412 Hex: 0x7DB4F5D4
History X_Zero (0)	R	528	Float	Active Zero current in History (0)
History X_Span (0)	R	530	Float	Active current value of the calibration in history (0)
History DateTime (0)	R	532	Uint32	Date and Time of the active calibration (0)
History X_Zero (1)	R	534	Float	Last Zero current in History(1)
History X_Span (1)	R	536	Float	Last current value of the calibration in history (1)
History DateTime (1)	R	538	Uint32	Date and Time of the last calibration (1)
History X_Zero (2)	R	540	Float	Zero current in History before last (2)
History X_Span (2)	R	542	Float	Current value of the calibration in history before last (2)

History DateTime (2)	R	544	Uint32	Date and Time of the calibration before last (2)
History X_Zero (3)	R	546	Float	Third last Zero current in History (3)
History X_Span (3)	R	548	Float	Third last current value of the calibration in history (3)
History DateTime (3)	R	550	Uint32	Date and Time of the third last calibration (3)
History X_Zero (4)	R	552	Float	Fourth last Zero current in History (4)
History X_Span (4)	R	554	Float	Fourth last current value of the calibration in history (4)
History DateTime (4)	R	556	Uint32	Date and Time of the fouth last calibration (4)
Measuring range	R	558	Float	Measuring range of the sensor
Sensortype	R	768	Char[16]	Type of the sensor
Hardware Version	R	776	Uint8	Hardware version of the sensor
Firmware Version	R	777	Uint8	Firmware Version of the sensor
Nominal Slope	R	778	Float	Default 7.5
Serialnumber	R	780	Char[20]	Seriennummer of the sensor
Part Number	R	791	Char[10]	Partnumber of the sensor
SlaveID	RW	1024	Uint8	**SlaveID of the sensor, accepted value range 1–247, default 65**
Baud rate	RW	1025	Uint8	0 := 2400 1 := 4800 **2 := 9600 (default**) 3 := 19200 4 := 38400 5 := 57600 6 := 115200
Parity / Stop bit	RW	1026	Uint8	0 := none / 2 1 := even / 1 2 := odd / 1 **3 := none / 1 (default)**

*** Note:** The configuration registers should be written to as seldom as possible and especially not in every measuring cycle, otherwise the flash memory may be damaged.

History: The active / current calibration data are stored in registers 518–522. A calibration becomes active, when date and time are written (as explained in the example). Most recent calibration data is stored in addresses 518–522 and in registers 528–532 (0). Older calibrations are shifted to the next history registers. Oldest calibration data will be deleted.